F.A.I. RTE.	SECTION	COUNTY	TOTAL SHEETS	SHEET NO.
94	•	COOK	907	623
STA. 1200+00.00	TO STA. 1365+00			
FED. ROAD DIST. NO.	ILLINOIS	FED. AID PROJECT		

• (1516.1, 1717 & 1818) R-9

62695

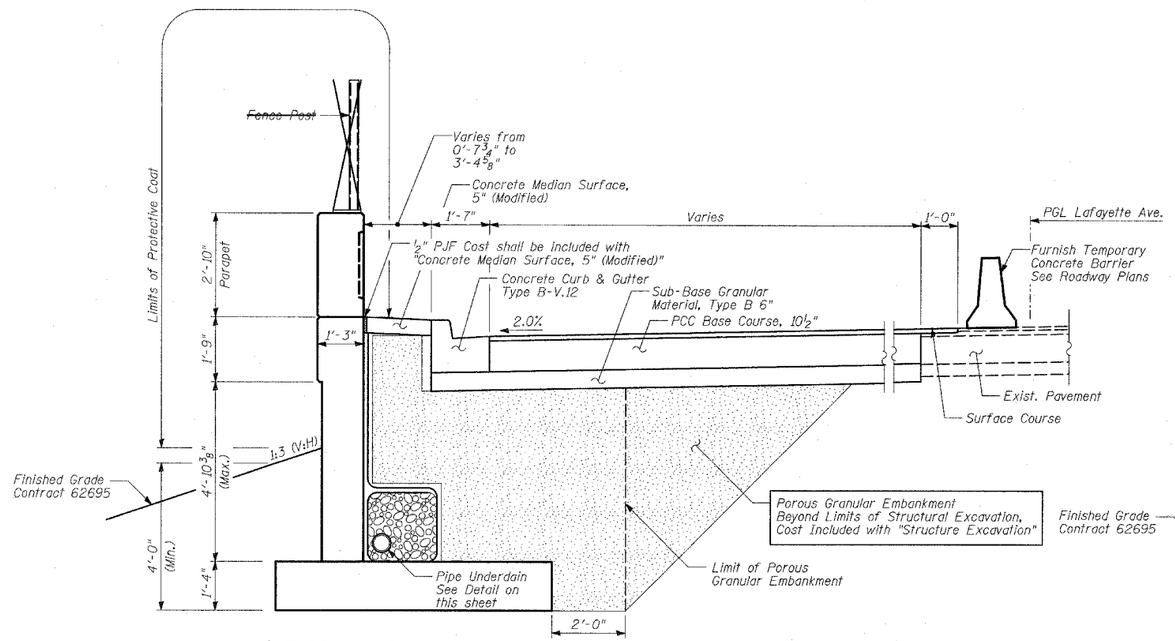

TYPICAL CROSS-SECTION

(Sta. 1323+23.72 to Sta. 1324+08.53)
(Sta. 1324+13.56 to Sta. 1328+28.65)

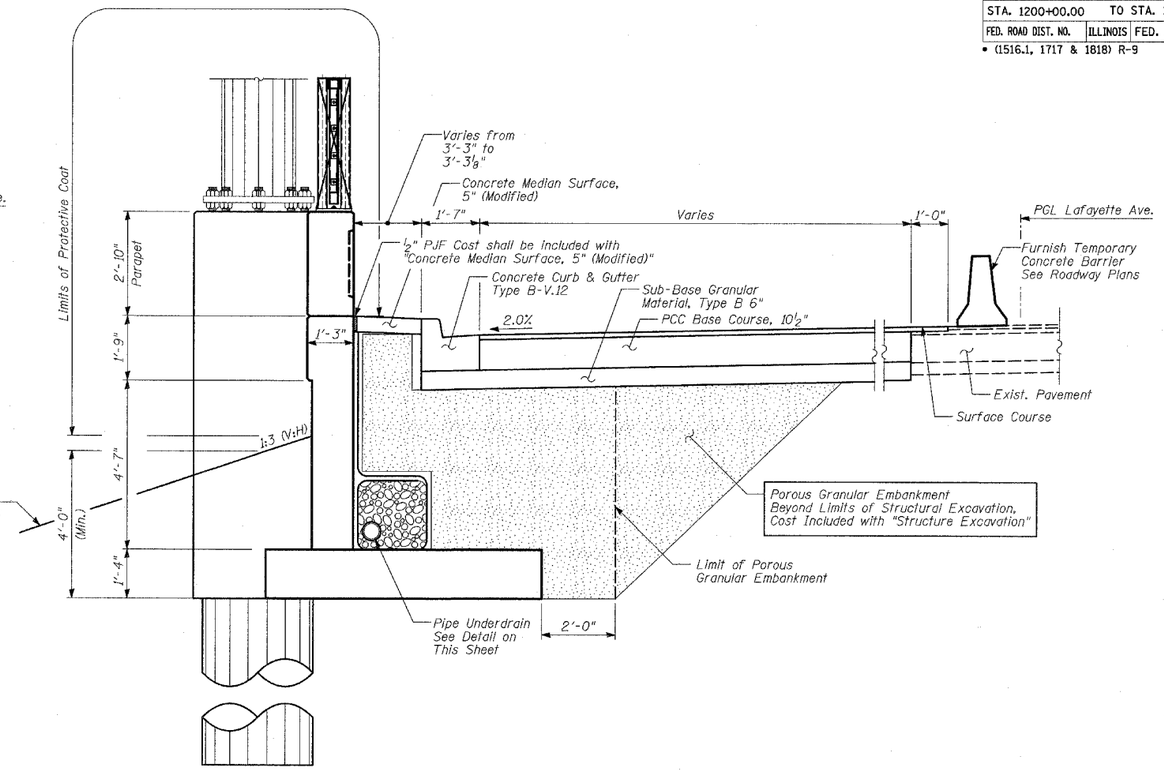

TYPICAL CROSS-SECTION

(Through High Mast Light Tower - 5RAB2)
(Sta. 1324+08+53 to Sta. 1324+13.56)

LEGEND

- Porous Granular Embankment
- Structure Excavation

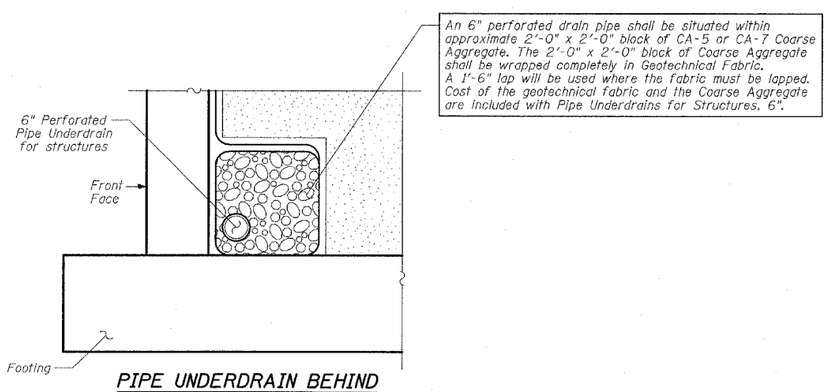

PIPE UNDERDRAIN BEHIND RETAINING WALL

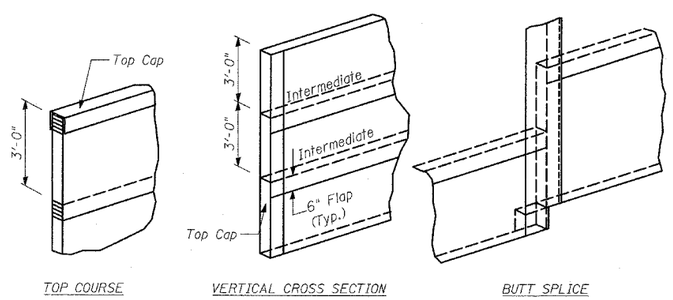

GEOCOMPOSITE WALL DRAIN DETAILS

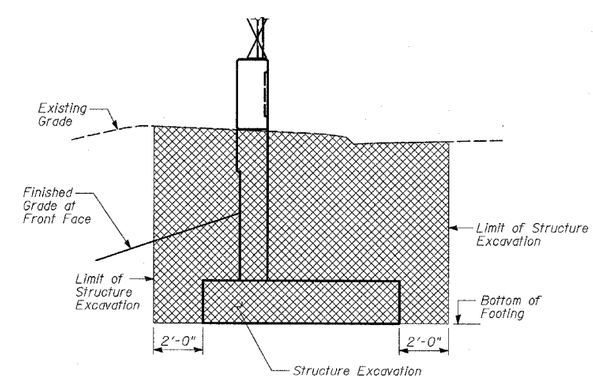

STRUCTURE EXCAVATION

SHEET 13 OF 25

REVISIONS	
NAME	DATE
REVISED	04/15/05

ILLINOIS DEPARTMENT OF TRANSPORTATION

F.A.I. 94 (DAN RYAN EXPRESSWAY)
RETAINING WALL ALONG LAFAYETTE AVE.
77TH PL. TO 78TH ST.
WALL 73B
WALL CROSS SECTIONS & DETAILS (1 of 2)

S.N.
SCALE:
DATE: MARCH 25, 2005
DESIGNED BY: MI, DJR
DRAWN BY: DJR
CHECKED BY: TD, MI

TY·LIN INTERNATIONAL

$FILE$ $TIME$ $DATE$