F.A.I. RTE.	SECTION	COUNTY	TOTAL SHEETS	SHEET NO.
94	•	COOK	907	491
STA. 1200+00.00		TO STA. 1365+00		
FED. ROAD DIST. NO.	ILLINOIS	FED. AID PROJECT		

• (1516.1, 1717 & 1818) R-9

62695

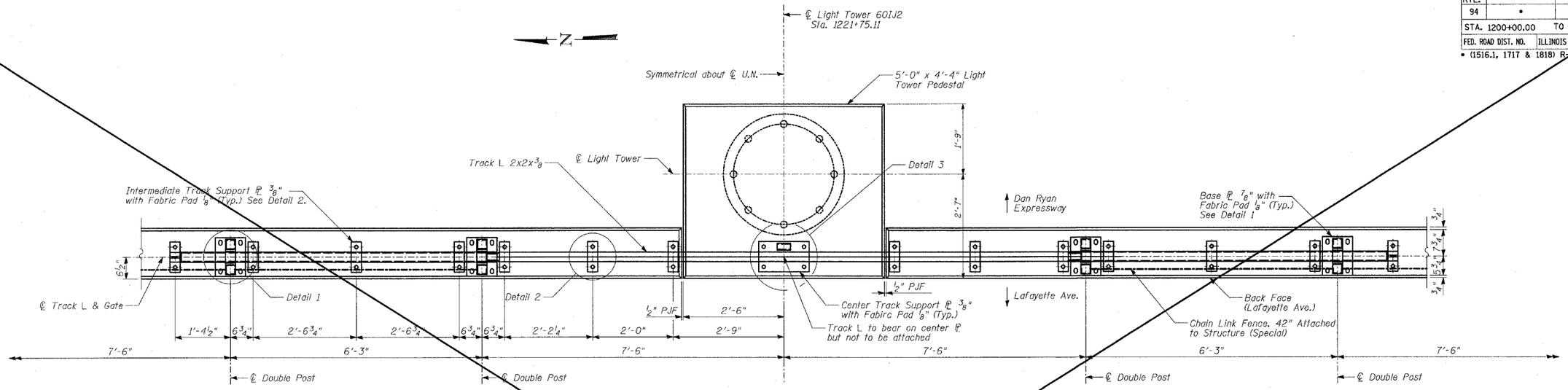

PLAN - GATE IN OPEN POSITION

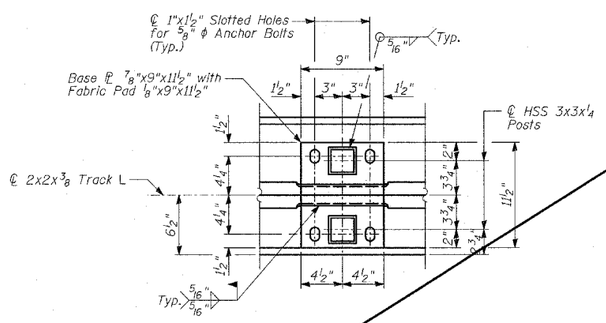

DETAIL 1 - BASE PL PLAN

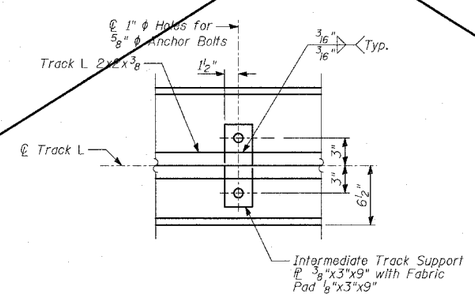

DETAIL 2

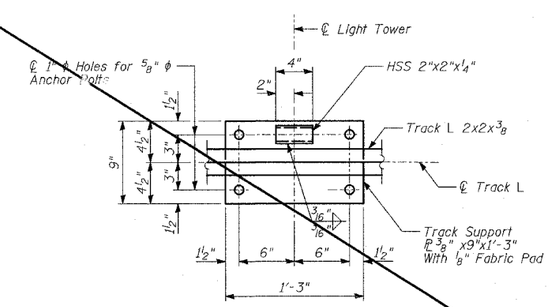

DETAIL 3

BILL OF MATERIAL

ITEM	UNIT	TOTAL
Chain Link Gate Assembly (Special)	EACH	1

NOTES:

1. All bolts shall be stainless steel conforming to ASTM F593-98 and F594-98.
2. All pipes and bars shall be hot dipped galvanized after fabrication.
3. For Back Face Elevations, see Sheet 20 of 34.
4. For Anchor Bolt Details, see Sheet 21 of 34.

SHEET 19 OF 34

REVISIONS	
NAME	DATE
REVISED	04/15/05

ILLINOIS DEPARTMENT OF TRANSPORTATION

F.A.I. 94 (DAN RYAN EXPRESSWAY)
RETAINING WALL ALONG LAFAYETTE AVE.
93RD ST. TO 91ST ST.
WALL 36
GATE PLAN AND NOTES

S.N. 016-W948 DESIGNED BY: DJR
SCALE: N.T.S. DRAWN BY: DJR
DATE: MARCH 25, 2005 CHECKED BY: TD

TY·LIN INTERNATIONAL

$FILE$ $TIME$ $DATE$