F.A.I. RTE.	SECTION	COUNTY	TOTAL SHEETS	SHEET NO.
94	*	COOK	907	398
STA.		TO STA.		
FED. ROAD DIST. NO.	ILLINOIS	FED. AID PROJECT		

* (1516.1, 1717 & 1818) R-9

62695

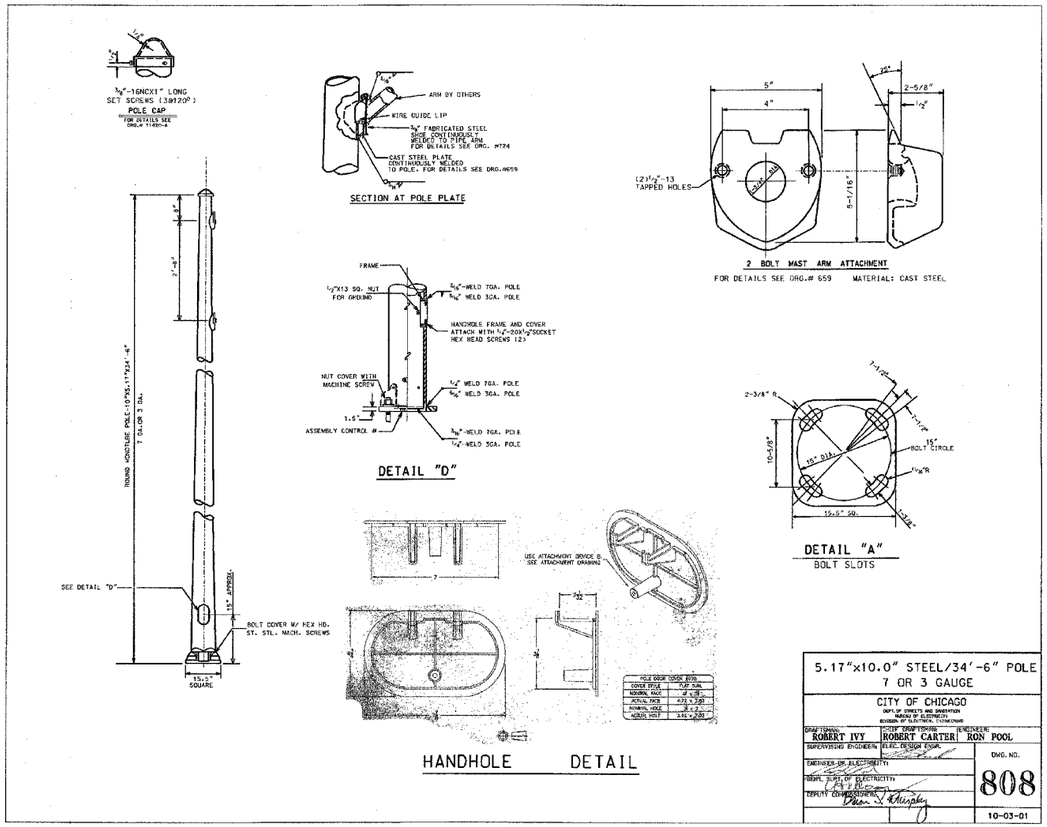

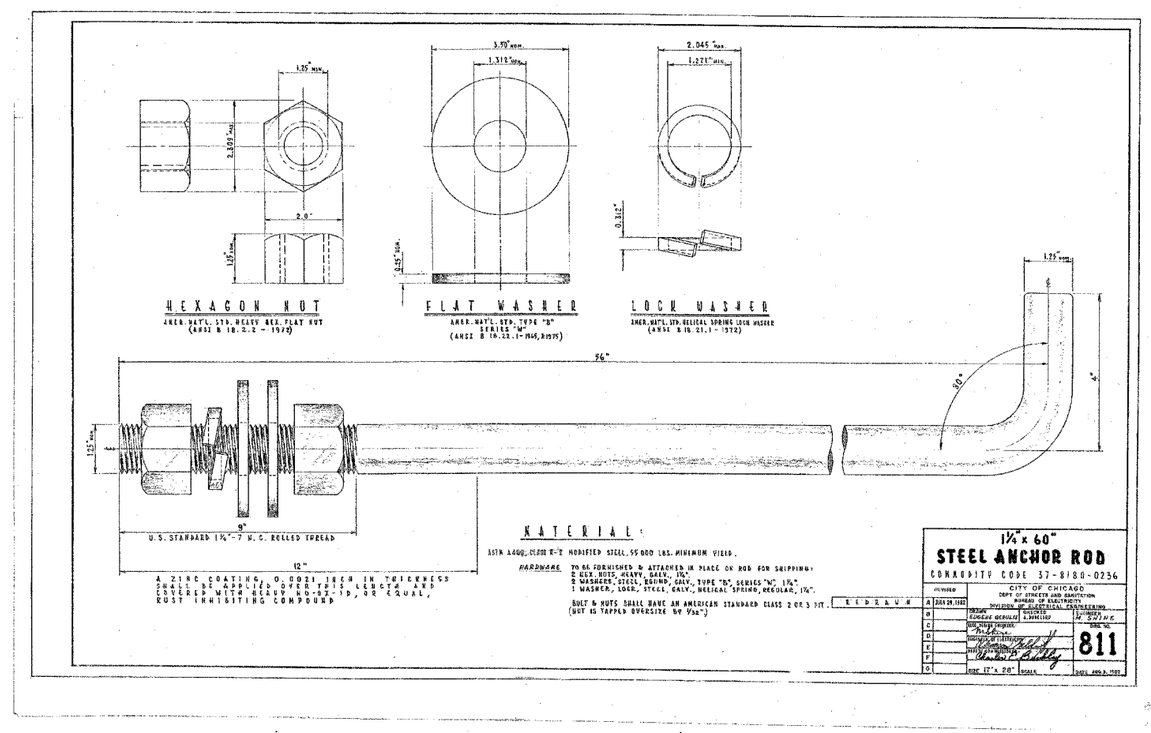

REVISIONS	
NAME	DATE
REVISED	04/15/05

ILLINOIS DEPARTMENT OF TRANSPORTATION

F.A.I. 94 (DAN RYAN EXPRESSWAY)

CITY OF CHICAGO

BUREAU OF ELECTRICITY STANDARDS

SCALE: DRAWN BY: REW

DATE: MARCH 25, 2005 CHECKED BY: WHI

KNIGHT

Engineers & Architects

FILE: J:\6596.001\Cadd\Sheets\Revised 1781\04-15-05\659202 SIGNAL05 Rev04152005.dgn