F.A.I. RTE.	SECTION	COUNTY	TOTAL SHEETS	SHEET NO.
94	*	COOK	907	328
STA.		TO STA.		
FED. ROAD DIST. NO.	ILLINOIS	FED. AID PROJECT		

* (1516.1, 1717 & 1818) R-9

62695

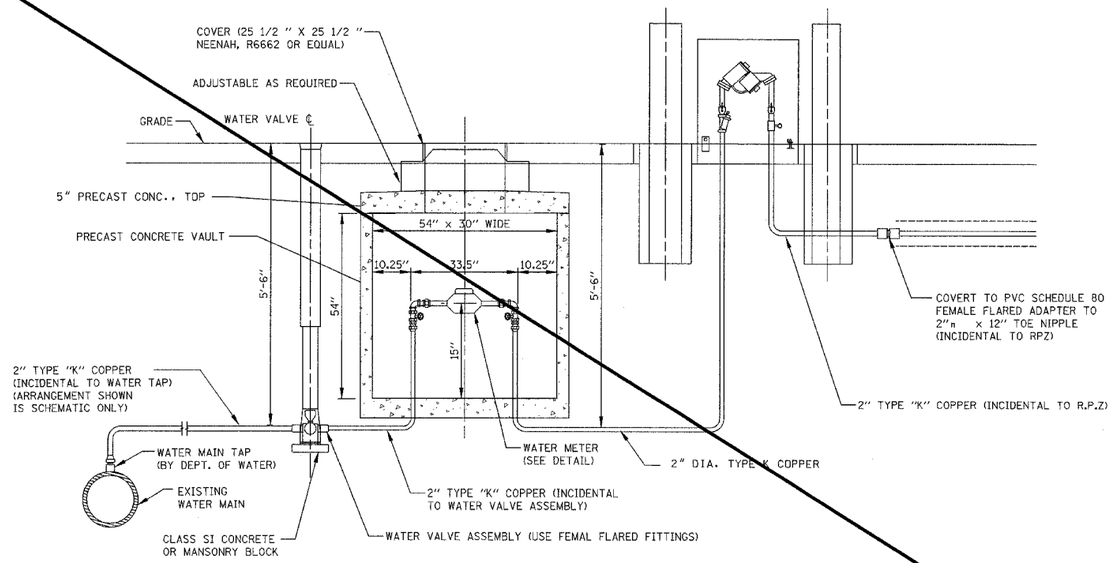

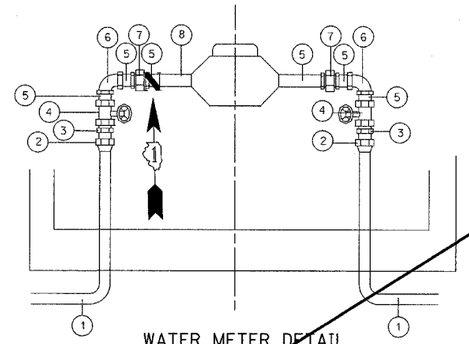

WATER METER DETAIL

NOT TO SCALE

KEY	
1	TYPE K COPPER
2	F.M. FLARED FITTING
3	MALE I.P.T. TO FLARED
4	GATE VALVE
5	BRASS NIP
6	BRASS ELL
7	BRASS UNION
8	METER

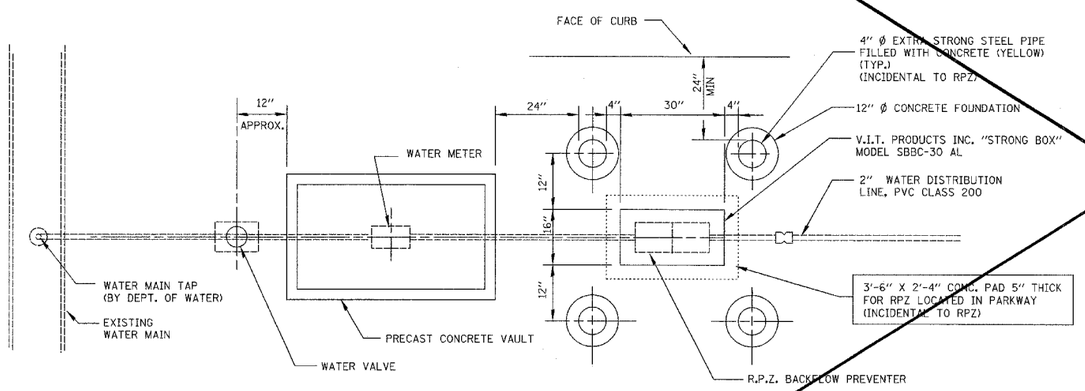

WATER SERVICE CONNECTION PLAN

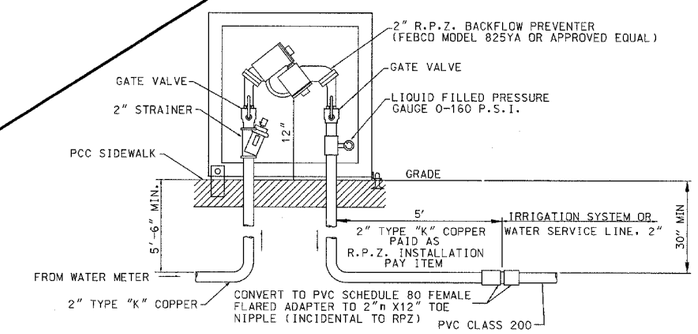

2" R.P.Z. INSTALLATION LAYOUT

NOT TO SCALE

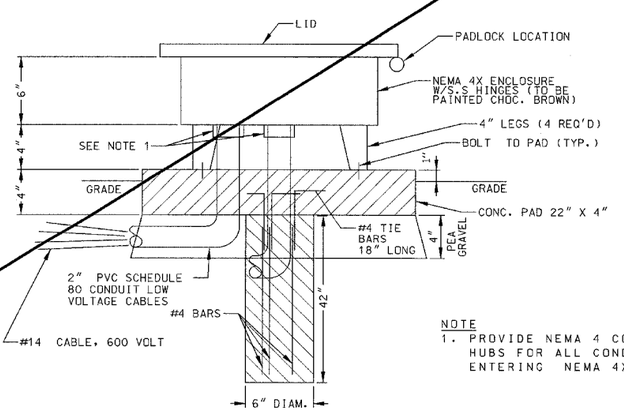

NOTE
1. PROVIDE NEMA 4 CONDUIT HUBS FOR ALL CONDUITS ENTERING NEMA 4X ENCLOSURE

IRRIGATION CONTROLLER NEMA 4X ENCLOSURE - DETAIL

NOT TO SCALE

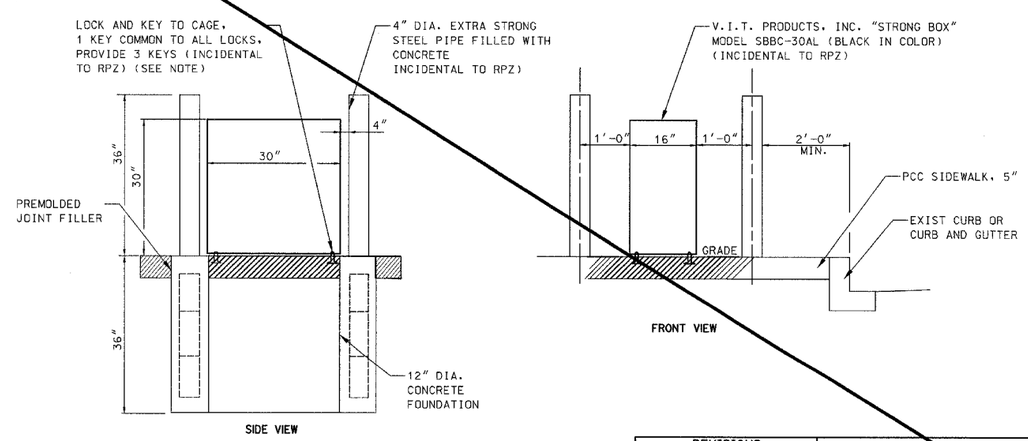

NOTE:
THE CONTRACTOR SHALL COORDINATE THE HARDWARE REQUIREMENTS FOR KEYING OF THE LOCK WITH MR. KEN MARTIN, CITY OF CHICAGO, AT (312) 744-1863.

DETAIL OF BACKFLOW PREVENTER ENCLOSURE AND BOLLARDS

NOT TO SCALE

KNIGHT
Engineers & Architects

REVISIONS	
NAME	DATE
REVISED	05/06/05

ILLINOIS DEPARTMENT OF TRANSPORTATION

F.A.I. 94 (DAN RYAN EXPRESSWAY)

76TH AND 75TH STREET CONSTRUCTION DETAILS

SCALE: NONE | DRAWN BY: WHI

DATE: MARCH 25, 2005 | CHECKED BY: JCM

FILE: L:\6592.02\Cad\Sheets\Revised 17b\ 05-06-05\6592020s102 Rev050605.dgn