93418

COUNTY	ROUTE	SECTION	TOTAL SHEETS	SHEET NO.
ADAMS	FAS 589	06-00195-00-RS	16	6
STATION 90+00 TO STATION 135+00				
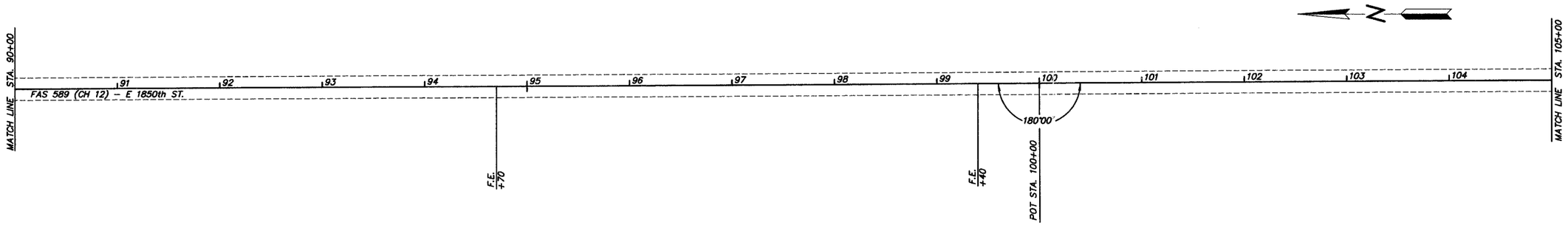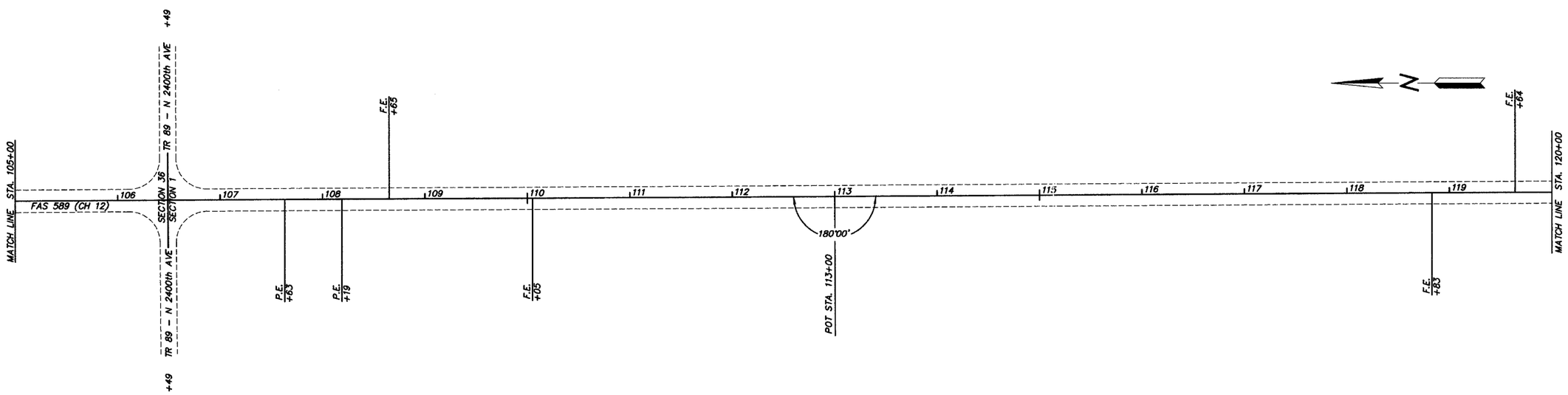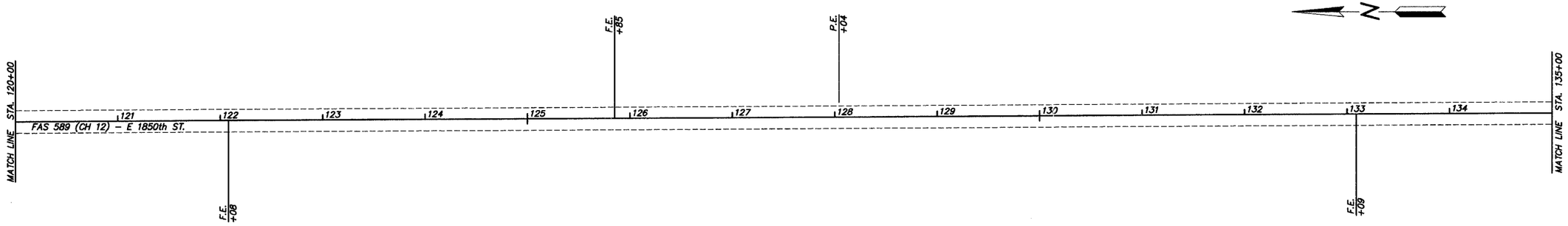
PROJECT NO. RS-589(103)