93417

COUNTY	ROUTE	SECTION	TOTAL SHEETS	SHEET NO.
ADAMS	FAS 1589	06-00197-00-RS	10	8
STATION 150+00 TO STATION 177+00				

PROJECT NO. RS-1589(104)

50 0 50 100
GRAPHIC SCALE IN FEET

N

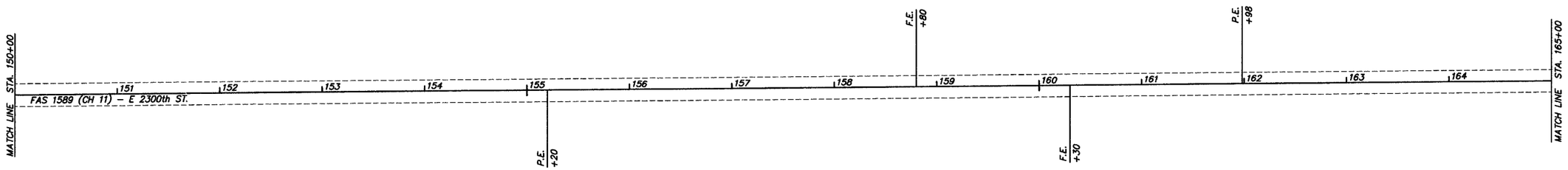
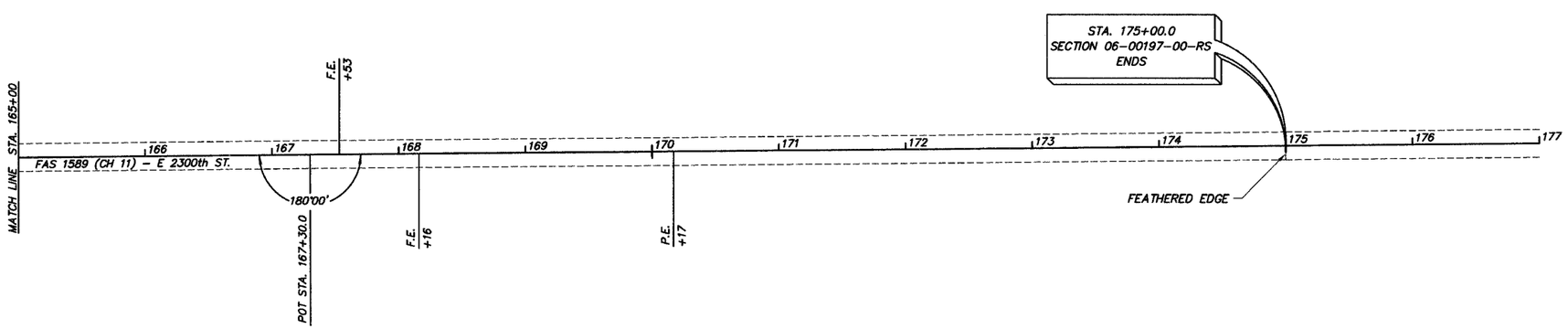
N