RTE.	SECTION	COUNTY	TOTAL SHEETS	SHEET NO.
BIKE TRAIL	••••	SANGAMON	35	28
STA.		TO STA.		
FED. ROAD DIST. NO. _	ILLINOIS	FED. AID PROJECT •		

Bridge Sheet 2 of 4 Sheets
•••• 99-P4001-00BT
• TE-00D6(070)

STATE OF ILLINOIS
DEPARTMENT OF TRANSPORTATION

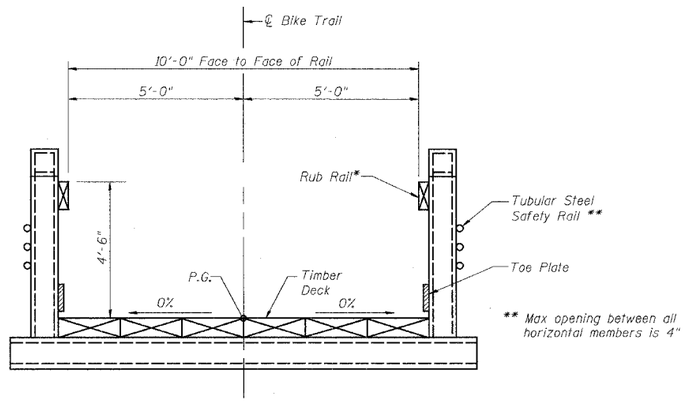

SECTION THRU PROPOSED PREFABRICATED BRIDGE SUPERSTRUCTURE

(SHOWN FOR DIMENSIONS ONLY. SHAPE MAY VARY)

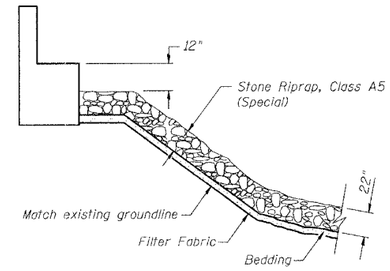

SOUTH ABUTMENT

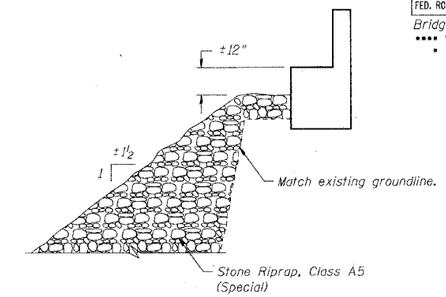

NORTH ABUTMENT

SECTION THRU ABUTMENT SHOWING SLOPE PROTECTION

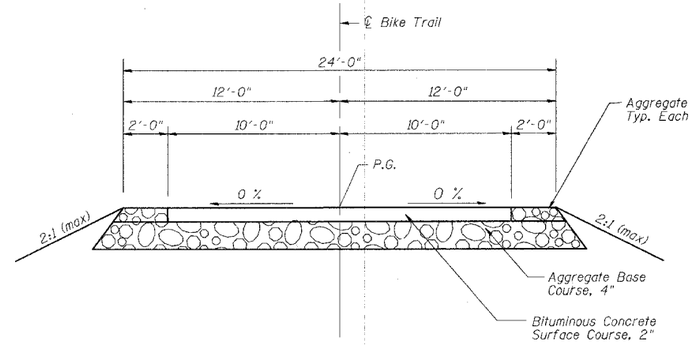

APPROACH CROSS SECTION

(BY OTHERS)

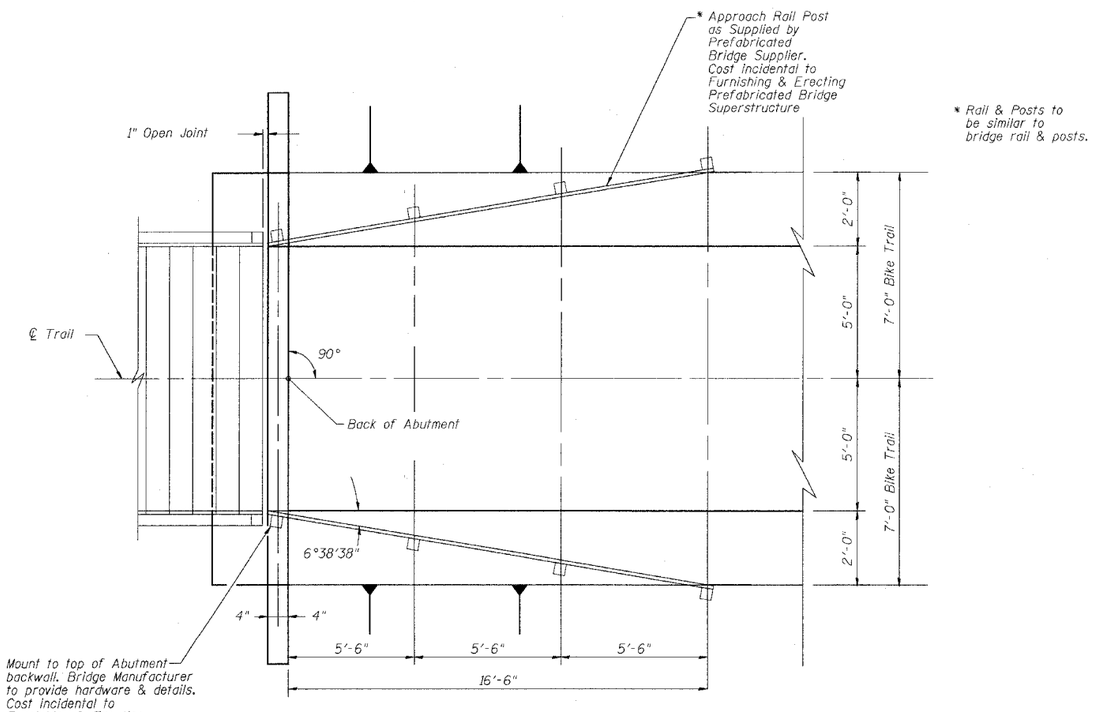

* Rail & Posts to be similar to bridge rail & posts.

PLAN APPROACH RAILING

(TYPICAL EACH END)

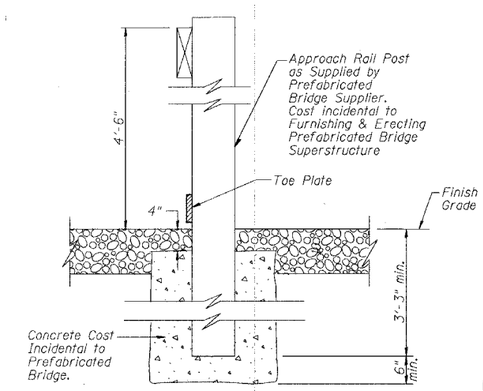

APPROACH RAIL POST IN EARTH

REVISIONS	
NAME	DATE
JLJ	9/24

ILLINOIS DEPARTMENT OF TRANSPORTATION
APPROACH RAIL & CROSS SECTION DETAILS
PREFABRICATED BRIDGE
SPRINGFIELD PARK DISTRICT
CITY OF SPRINGFIELD
BIKE TRAIL, SANGAMON COUNTY
BUNN SECTION 99-P4001-00-BT
STATION 45+05.00

SCALE: VERT. HORIZ.
DATE: 04/22/02
DRAWN BY: BISHOP
DESIGNED BY: BRADFORD
CHECKED BY: MATHUR

GREENE & BRADFORD, INC. OF SPRINGFIELD
CONSULTING ENGINEERS
200 CORNELL AVENUE 62707
SPRINGFIELD, ILLINOIS
PROFESSIONAL DESIGN FIRM NO. 184-001023
PROFESSIONAL & STRUCTURAL ENGINEERING CORPORATION
(217) 753-8894, (217) 753-8227 FAX, E-MAIL: - coadmin@greenebradford.com

COMPUTER FILE NO. 99391GN2-10
PROJECT 99391
1/12/06-MML

DESIGN		
INT.	DATE	REASON

PLOTS & CHECKS			
INT.	DATE	NO.	REASON

CHECKS		
INT.	DATE	REASON

IDOTPL-10 1"=10' 8/07/00

BIKE TRAIL, SANGAMON COUNTY