F.A.P. RTE.	SECTION	COUNTY	TOTAL SHEETS	SHEET NO.
709	*	**	72	8

* 113(RS-5,BR) & 114RS-2
** CHAMPAIGN & VERMILION
CONTRACT NO. 90864

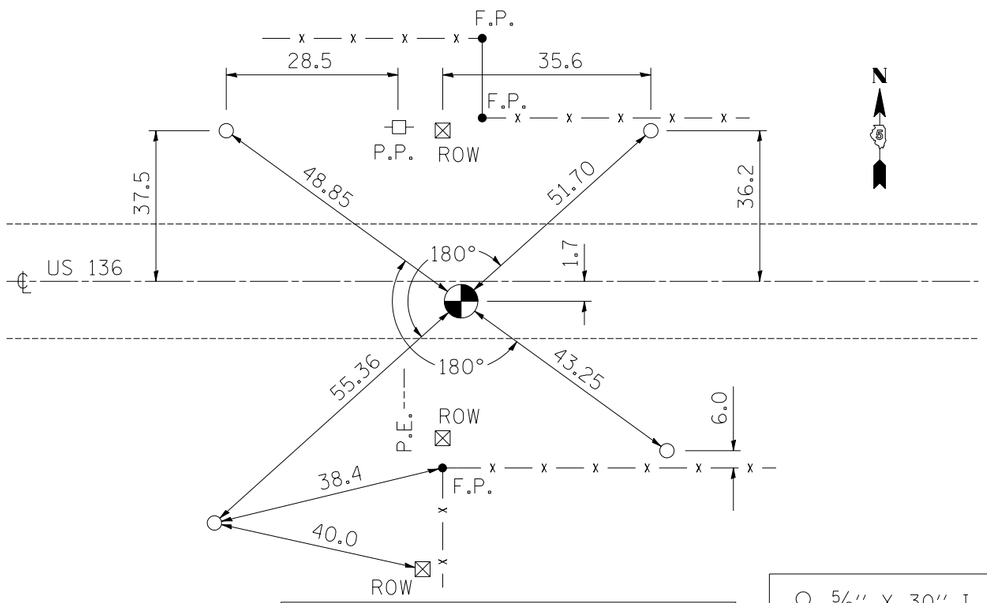

PK NAIL FOUND @ S1/4 COR
SEC 34-22N-14W
STATION 82+75

○ 5/8'' X 30'' I. PIN
SET FLUSH

○ 5/8'' X 30'' I. PIN
SET FLUSH

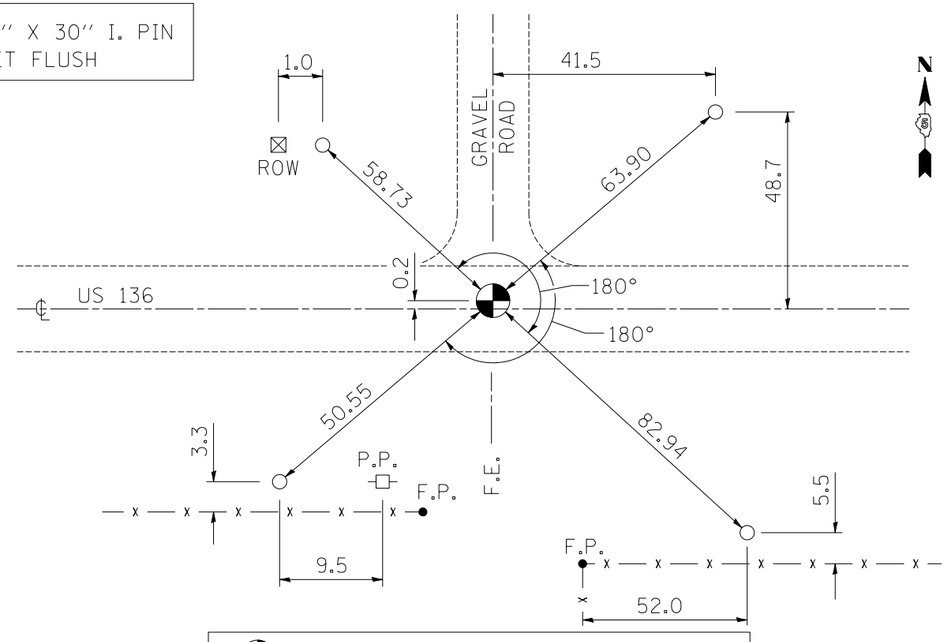

PK NAIL FOUND @ SE COR
SEC 34-22N-14W STATION 109+44.2