| F.A.U. RTE. | SECTION | COUNTY | TOTAL SHEETS | SHEET NO. |
|---|---|---|---|---|
| 0369 | 87-00025-00-BR | WILL | 156 | 121 |
| STA. | | TO STA. | | |
| FED. ROAD DIST. NO. | ILLINOIS | FED. AID PROJECT | | |

CONTRACT NO: 83757

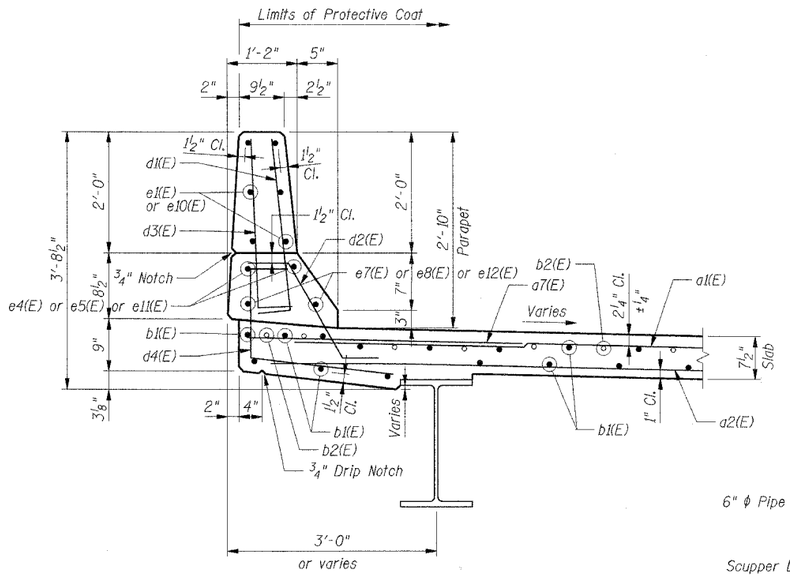


SECTION D-D

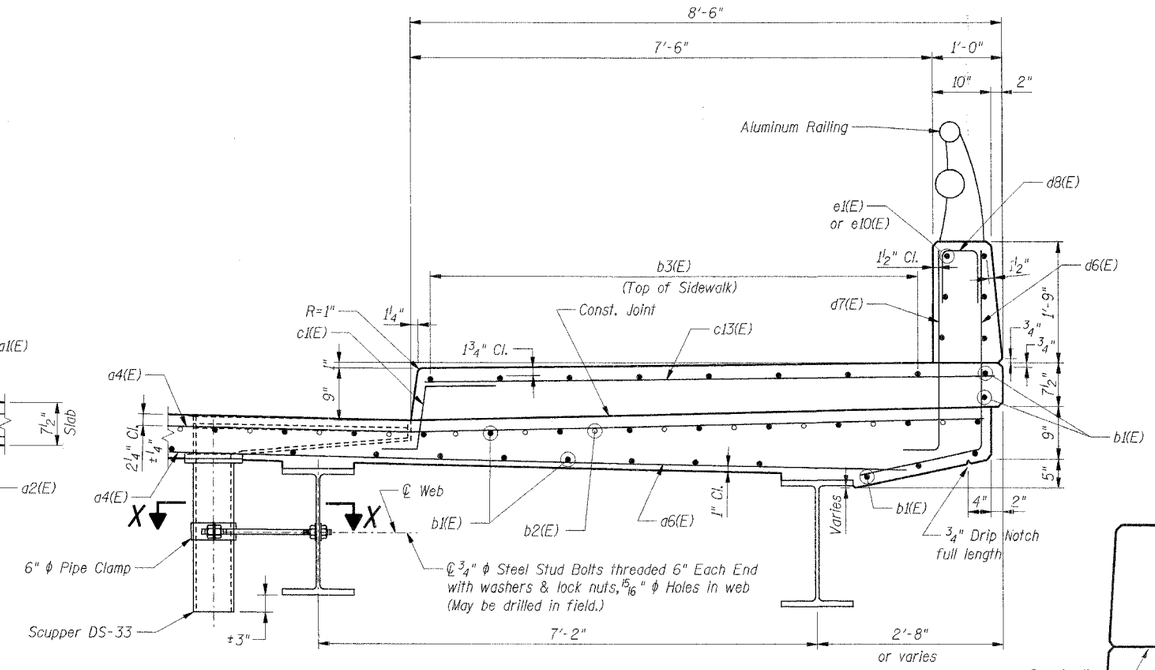


SECTION E-E

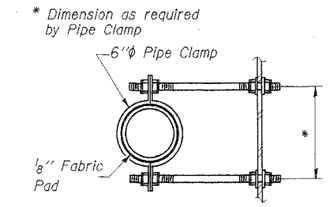


SECTION X-X

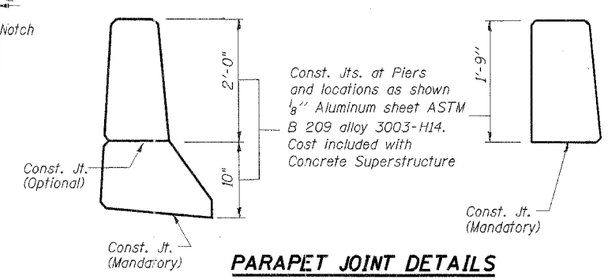


PARAPET JOINT DETAILS

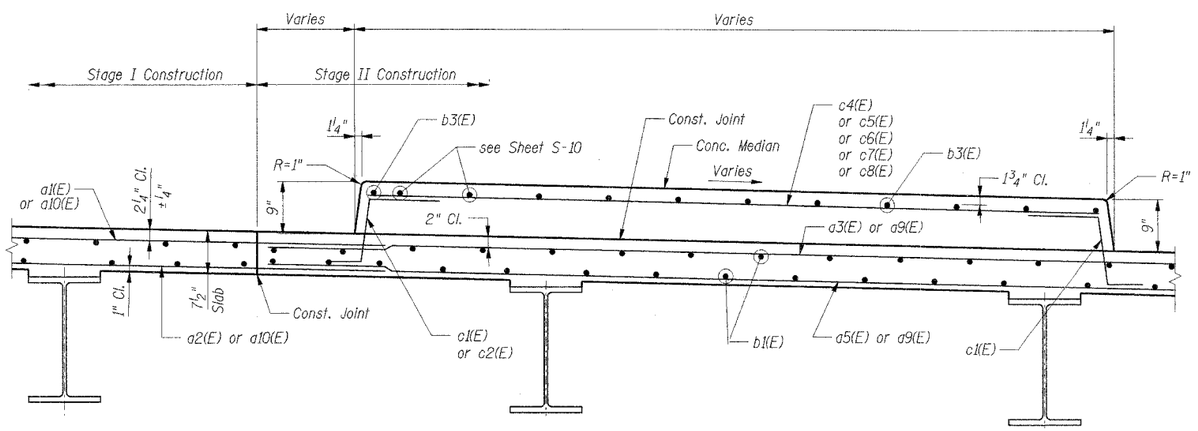


SECTION F-F

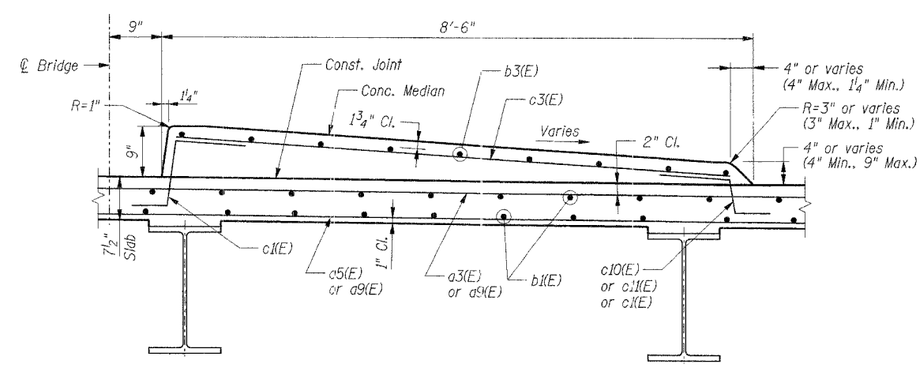


SECTION G-G

**Notes:**

1. Reinforcement Bars designated (E) shall be epoxy coated.
2. Work this Sheet with Sheets S-08, S-11, S-13 & S-10.
3. For Aluminum Railing Details, see Sheet S-24.

SHT. S-12

| REVISIONS | |
|---|---|
| NAME | DATE |

VILLAGE OF NEW LENOX
F.A.U. (0369) CEDAR ROAD OVER HICKORY CREEK
WILL COUNTY

PARAPET & DECK DETAILS 1

SCALE: 1"=1'-0"
DATE: 07/01/05
DRAWN BY: FZD
CHECKED BY: KPS

TENG
TENG & ASSOCIATES, INC.
ENGINEERS/ARCHITECTS/PLANNERS
205 N. MICHIGAN AVE. CHICAGO, IL 60601
TELEPHONE: 312/616-0300

..\DKPOINT9.DGN, ..\SCROONTI.DGN, ..\DKPOINT9.DGN, ..\TTBOONIZ.DGN, ..\FDSCRATCH.DGN, ..\DIAOONUO.DGN, ..\PAROONUU.DGN, ..\DKPOINT9.DGN, ..\DKPOINT9.DGN
7-19-2005, 16:07:54 S:\DOCUMENT\0232860\STRUCT\DGN\DETOONUV.DGN ROSSPF