FAP ROUTE	SECTION	COUNTY	TOTAL SHEETS	SHEET NO
304	6RS-2	JERSEY	12	11
STA. _____		TO STA. _____		
CONTRACT NUMBER:	76942			

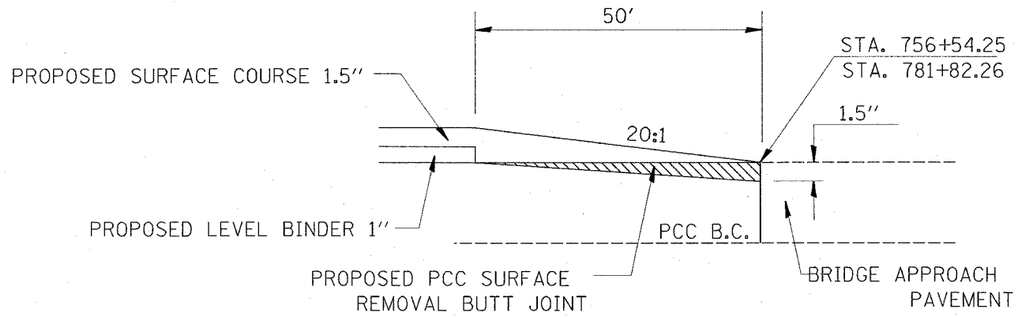

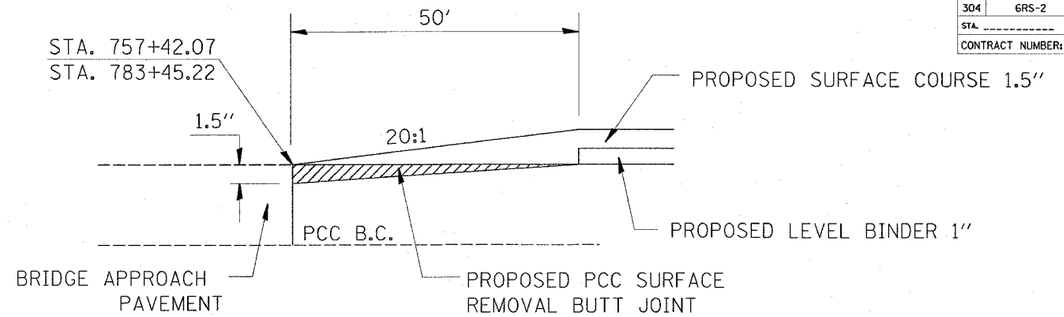

BUTT JOINT DETAIL FOR BRIDGES

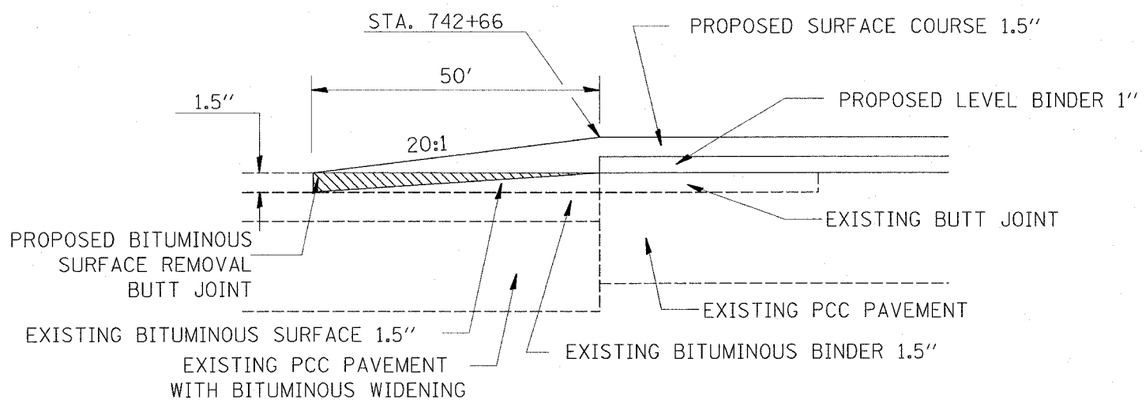

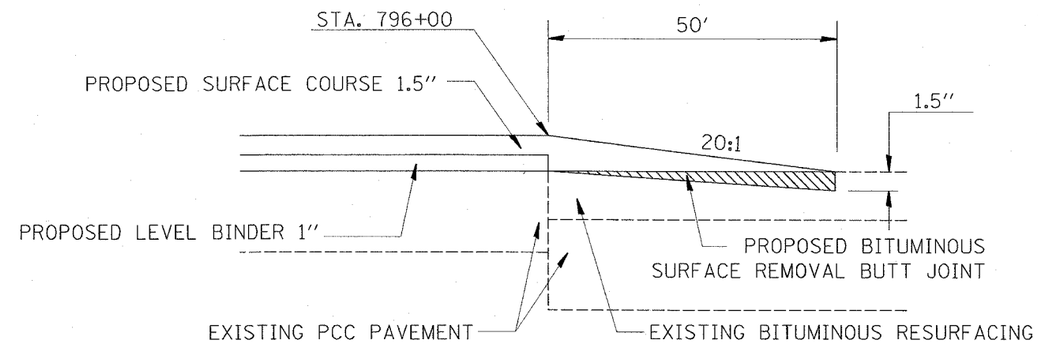

BUTT JOINT DETAIL FOR IL 16

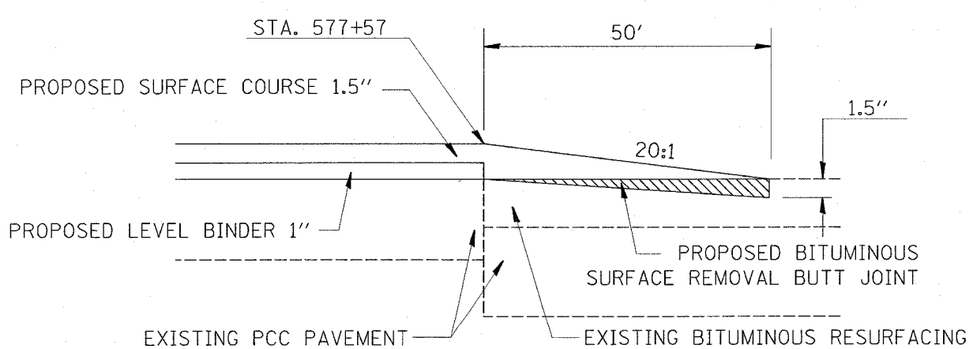

BUTT JOINT DETAIL FOR ELDRED RD

REVISIONS	
NAME	DATE

ILLINOIS DEPARTMENT OF TRANSPORTATION

BUTT JOINT DETAILS

FAP ROUTE 304 (IL 16/IL 100)
SECTION 6RS-2
JERSEY COUNTY

DRAWN BY:

PLOT DATE: 3/29/2006

PLAN	SURVEYED	BY	DATE
	PLOTTED		
	ALIGNMENT CHECKED		
	RT. OF WAY CHECKED		
NOTE BOOK	CADD FILE NAME		
NO.			

BIDSAT333
3/29/2006
c:\pwidot\wd06305\plan\pb06305a.dgn
"REF=..."
"REF=..."