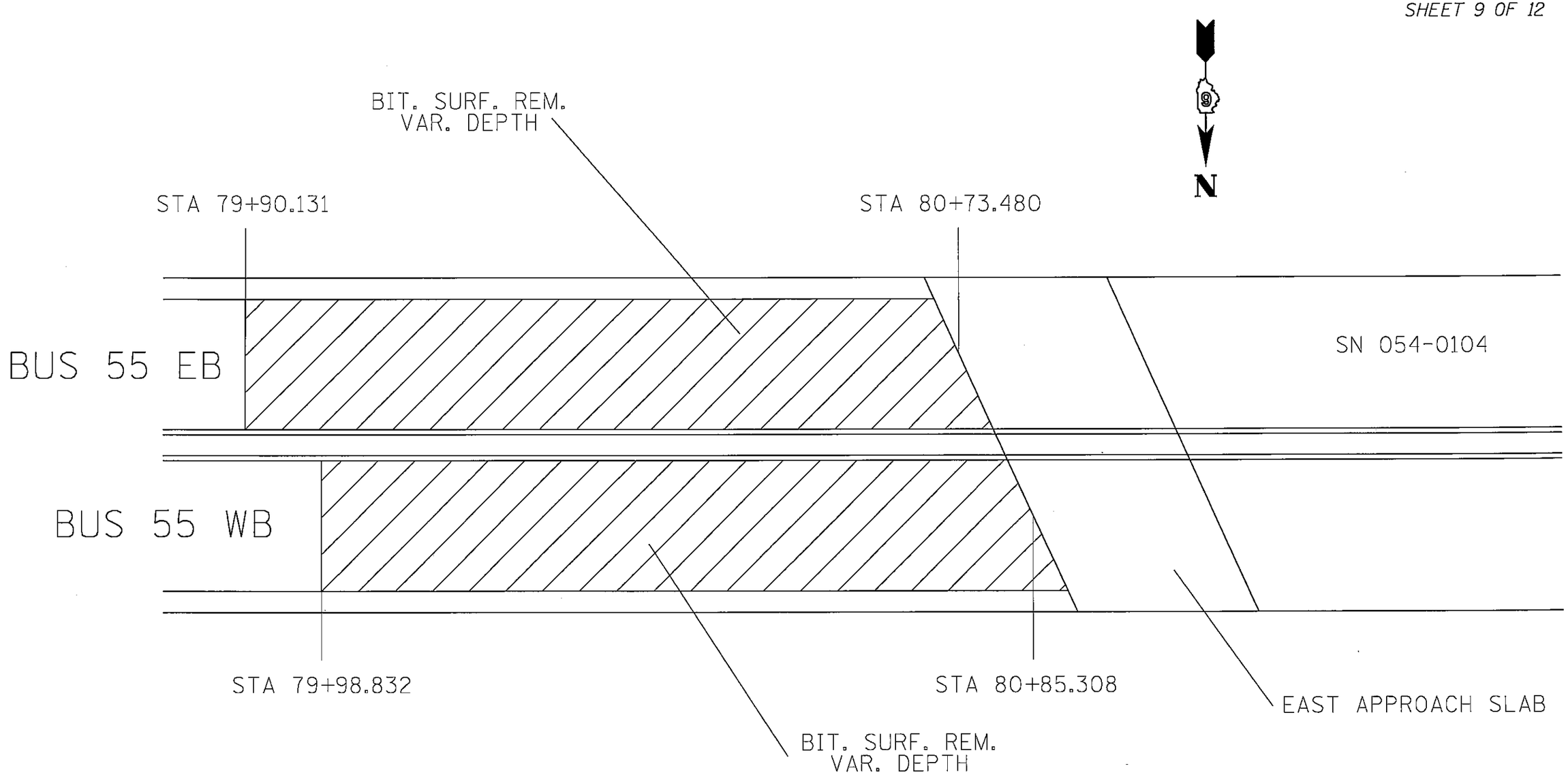

SN 054-0104
PLAN VIEW
(NOT TO SCALE)