CONTRACT NO. 66648

F.A.I. RTE.	SECTION	COUNTY	TOTAL SHEETS	SHEET NO.
80	(50-2HB)I-1	LASALLE	26	13
		ILLINOIS	STATE PROJECT	

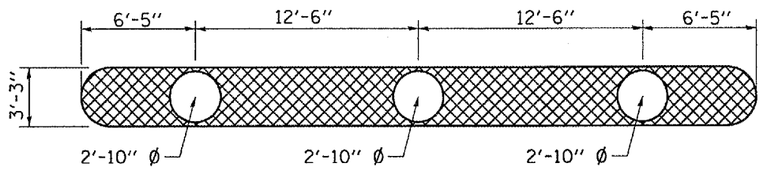

VIEW B–B

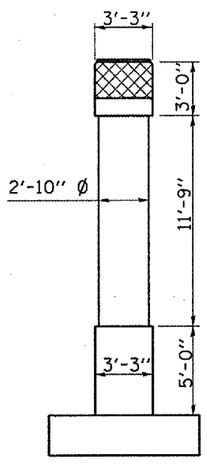

WEST END

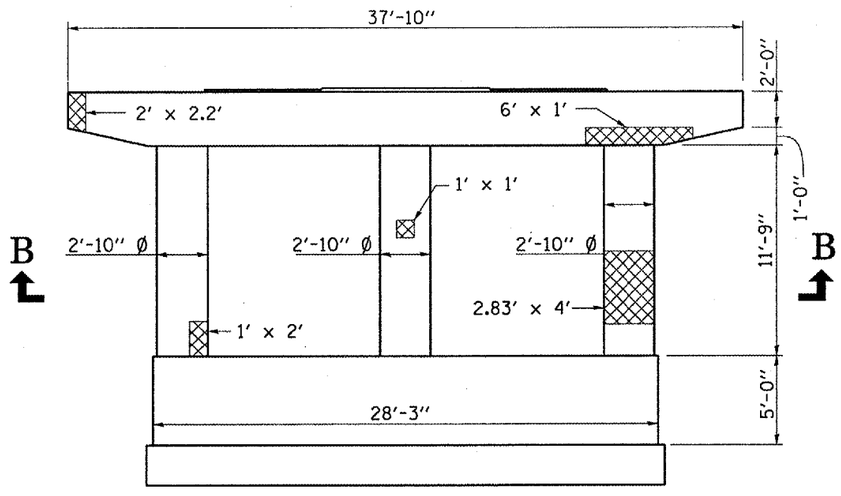

SOUTH FACE

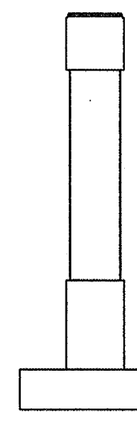

EAST END

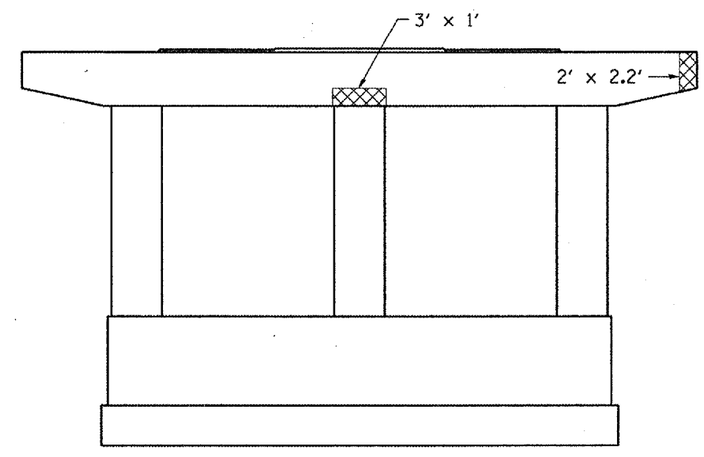

NORTH FACE

BILL OF MATERIAL

Item	Unit	Total
STRUCTURAL REPAIR OF CONCRETE, DEPTH ≤ 5"	SQ. FT.	140

PIER #2

050–0078 NB

REVISIONS NAME	DATE

ILLINOIS DEPARTMENT OF TRANSPORTATION
PIER REPAIR DETAILS
PIER #2 S.N. 050–0078 NBL
IL ROUTE 251 OVER INTERSTATE ROUTE 80
F.A.I. ROUTE 80 SECTION (50–2HB)I–1
LASALLE COUNTY
STATION 569+41.10

DATE 01/17/2006 DRAWN BY RLW

DATE: 01/17/2006
c:/projects/cmaln07/cm305/details.dgn

COUNTY: LASALLE SECTION: (50-2HB)I-1 FAI ROUTE 80