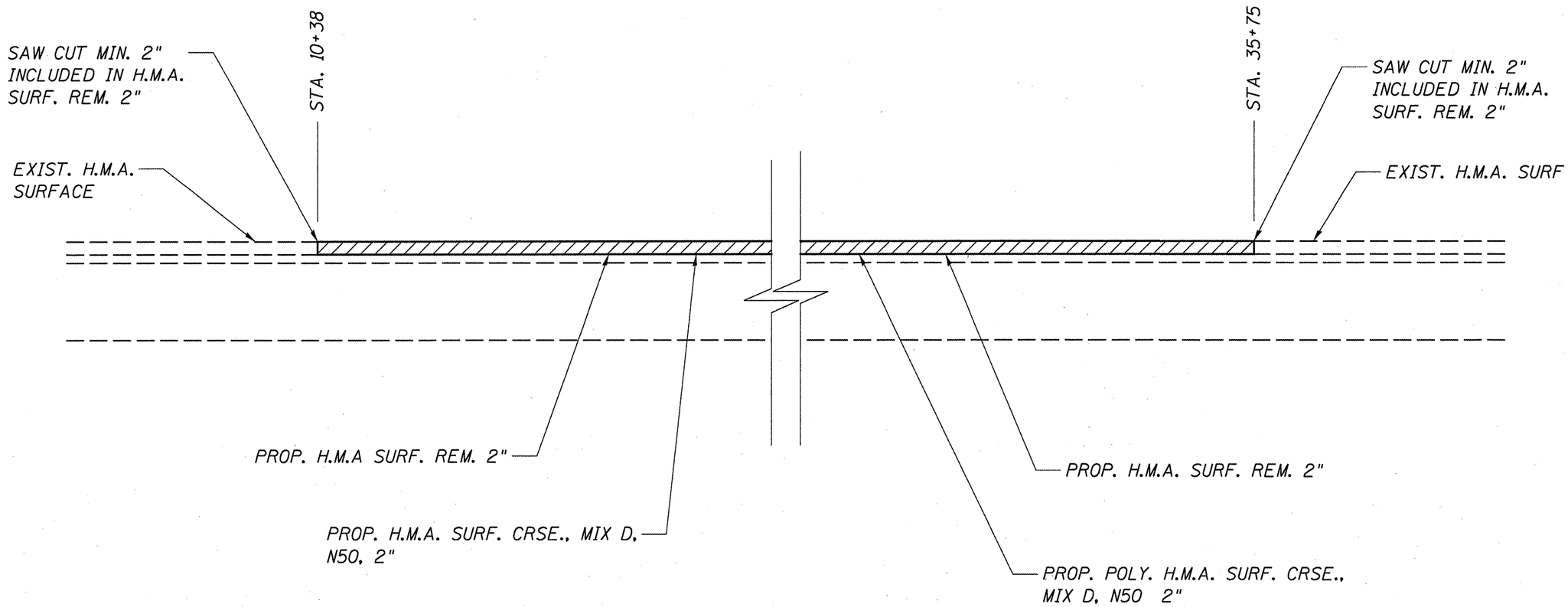

BUTT JOINT
FAP 317 (US 24)
SECTION 11RS-3
SCHUYLER COUNTY