CONTRACT NO.

F.A. RTE.	SECTION	COUNTY	TOTAL SHEETS	SHEET NO.
FAI 80	99-5-1-I-12	WILL	11	10
STA.		TO STA.		
FED. ROAD DIST. NO.	ILLINOIS	FED. AID PROJECT		

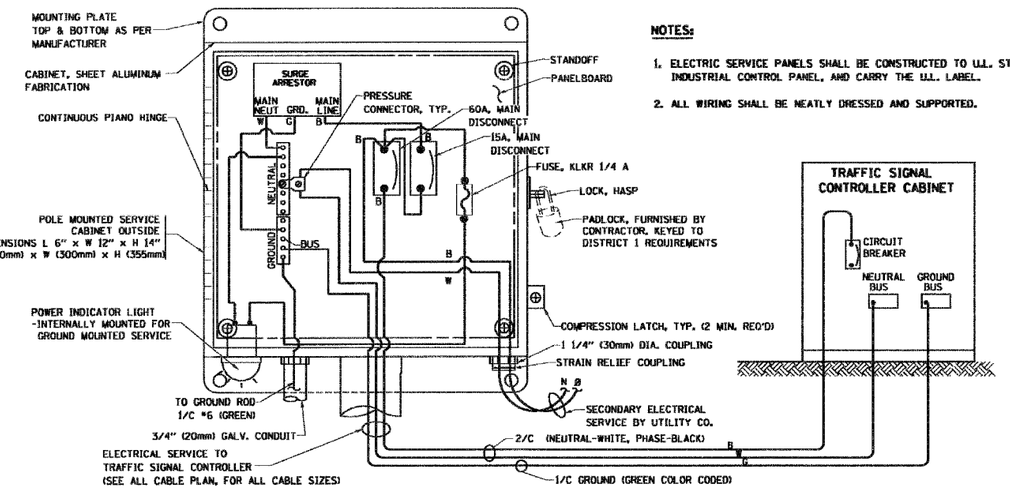

NOTES:

1. ELECTRIC SERVICE PANELS SHALL BE CONSTRUCTED TO U.L. STD 508, INDUSTRIAL CONTROL PANEL, AND CARRY THE U.L. LABEL.
2. ALL WIRING SHALL BE NEATLY DRESSED AND SUPPORTED.

ELECTRICAL SERVICE – PANEL DIAGRAM (TYPICAL FOR POLE AND GROUND MOUNTED SERVICE)

SERVICE INSTALLATION POLE MOUNT (SHOWN)

(NOT TO SCALE)

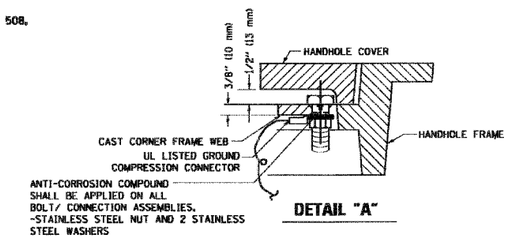

DETAIL "A"

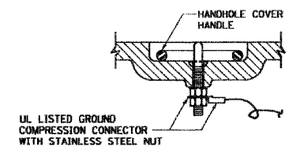

DETAIL "B"

NOTES:

GROUNDING SYSTEM

1. THE GROUNDING SYSTEM SHALL CONSIST OF AN INSULATED CONDUCTOR TYPE XLP, NO. 6 A.W.G., STRANDED COPPER TO BE INSTALLED IN RACEWAYS. THE GROUNDING CABLE SHALL BE INSTALLED IN A CONTINUOUS MANNER AS SHOWN ON THE CABLE PLAN PROVIDED. ALL GROUNDING CONDUCTORS SHALL BE BONDED TO METAL ENCLOSURE (HANDHOLE, POST, MAST ARM, CONTROLLER, ETC.). GROUND ROD SHALL BE 3/4" DIA. x 10'-0" (20mm x 3.0m) LONG, COPPER CLAD. ONE GROUND ROD SHALL BE INSTALLED AT ALL POST FOUNDATIONS, POLE FOUNDATIONS, CONTROLLER CABINET FOUNDATION AND ELECTRICAL SERVICE INSTALLATION AS INDICATED ON THE CABLE PLAN. IF THERE ARE ANY SPECIAL CONDITIONS SUCH AS SUB-SURFACE CONDITIONS OR INSTALLATION PROBLEMS, THE RESIDENT ENGINEER SHALL BE NOTIFIED OR CONTACT THE BUREAU OF TRAFFIC, ILLINOIS DEPARTMENT OF TRANSPORTATION DISTRICT ONE AT (847) 705-4139.
2. THE NEUTRAL CONDUCTOR AND THE GROUND CONDUCTOR SHALL BE CONNECTED IN THE SERVICE INSTALLATION. AT NO OTHER POINT IN THE TRAFFIC SIGNAL SYSTEM SHALL THE NEUTRAL AND GROUND CONDUCTORS BE CONNECTED.
3. ALL EQUIPMENT GROUNDING CONDUCTORS SHALL TERMINATE AT THE GROUND BUS IN THE CONTROLLER CABINET.
4. THE CONTRACTOR SHALL PROVIDE A GROUND CABLE WITH CONNECTORS BETWEEN THE HANDHOLE COVER AND HANDHOLE FRAME.

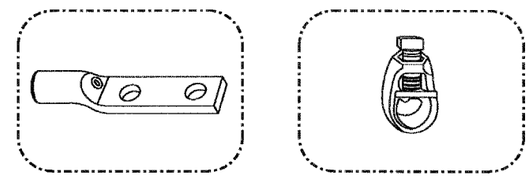

HEAVY-DUTY COMPRESSION TERMINAL (BURNDY TYPE YGHA OR APPROVED EQUAL)

3/4" (20mm) HEAVY-DUTY GROUND ROD CLAMP (BURNDY TYPE GRC OR APPROVED EUAL)

NOTES:

- ALL CLAMPS SHALL BE BRONZE OR COPPER, UL APPROVED.
- GROUND CABLE SHALL BE LOOPED OVER HOOKS IN THE HANDHOLES 6.5' (2.0m) SLACK SHALL BE PROVIDED IN SINGLE HANDHOLES 13' (4.0m) OF SLACK SHALL BE PROVIDED IN DOUBLE HANDHOLES. 5' (1.4m) OF SLACK SHALL BE PROVIDED BETWEEN FRAME AND COVER.

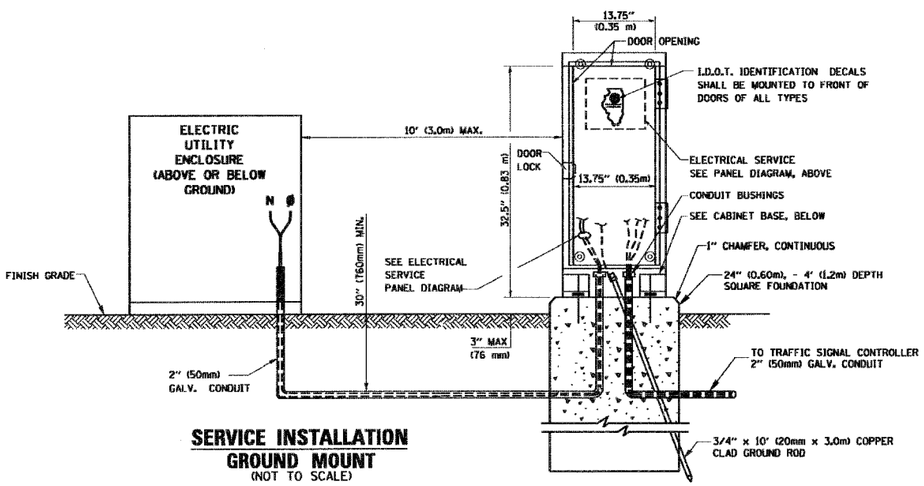

SERVICE INSTALLATION GROUND MOUNT

(NOT TO SCALE)

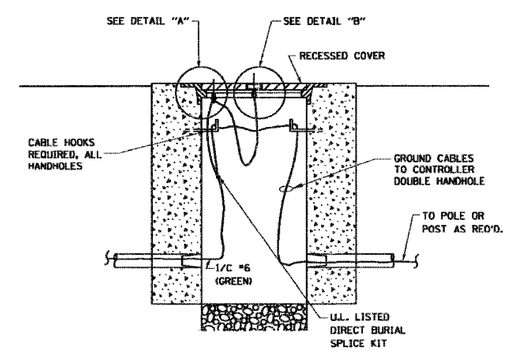

HANDHOLE COVER & FRAME – GROUNDING DETAIL

(NOT TO SCALE)

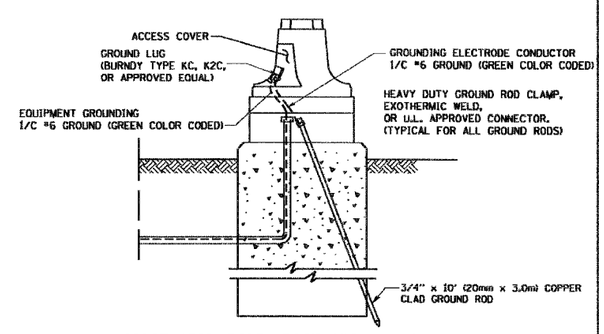

MAST ARM POLE / POST-GROUNDING DETAIL

(NOT TO SCALE)

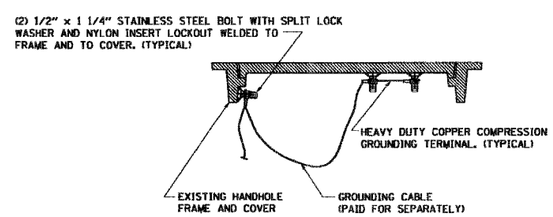

CABINET – BASE BOLT PATTERN

(NOT TO SCALE)

EXISTING HANDHOLE COVER & FRAME – GROUNDING DETAIL

(NOT TO SCALE)

REVISIONS	
NAME	DATE
CADD	5/30/00
CADD	3/15/01
BUREAU OF TRAFFIC	1/01/02

ILLINOIS DEPARTMENT OF TRANSPORTATION

DISTRICT ONE
STANDARD TRAFFIC SIGNAL
DESIGN DETAILS

SCALE: NONE

DRAWN BY: RWP
DESIGNED BY: DAD
CHECKED BY: DAZ
SHEET 3 OF 4

TS05

PLOT DATE = 3/7/2007
FILE NAME = A:\dtrafsig1.dgn
PLOT SCALE = 1.0000 ' / IN.
USER NAME = bauerdl