STATE OF ILLINOIS
DEPARTMENT OF TRANSPORTATION

ROUTE NO.	SECTION	COUNTY	TOTAL SHEETS	SHEET NO.
FAI 94	*	COOK	30	18
FED. ROAD DIST. NO. 7		ILLINOIS	FED. AID PROJECT-	

SHEET NO. 15
15 SHEETS

Contract Number: 60E12
* 1111-700 HB-BR

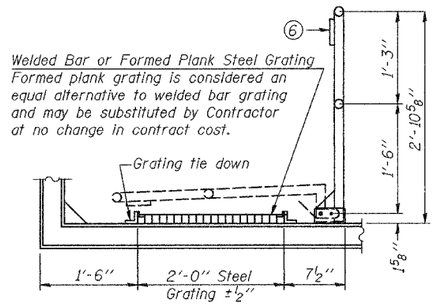

SIDE ELEVATION

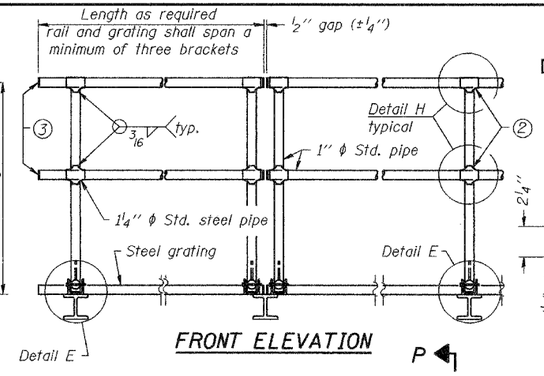

FRONT ELEVATION

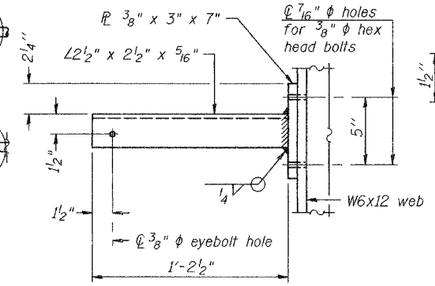

SECTION P-P

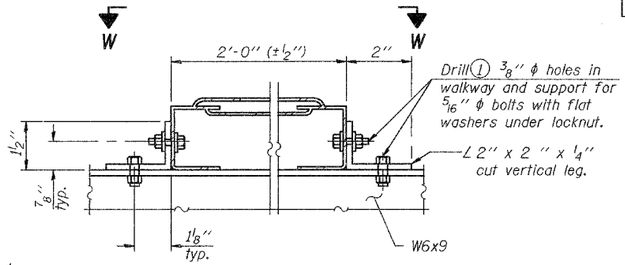

ALTERNATE FORMED PLANK GRATING DETAILS

Plank Grating: nominal depth = 2 1/2" (±1/2"); perforated or expanded steel sheet with a non-skid surface (non-serrated) concentrated load capacity = 500 lbs. with 6'-0" clear span.

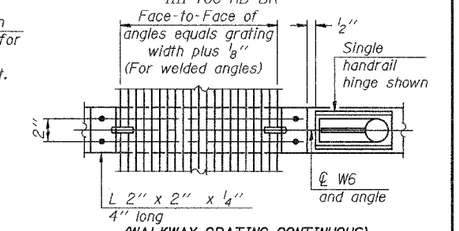

(WALKWAY GRATING CONTINUOUS)

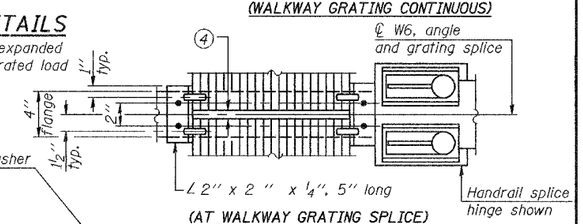

(AT WALKWAY GRATING SPLICE)

PLAN

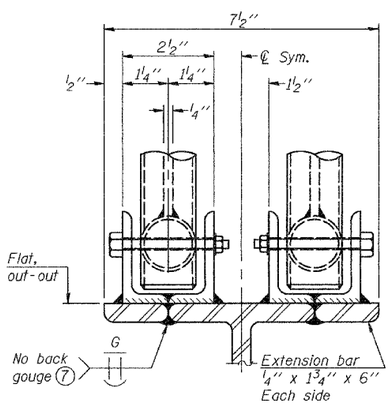

ELEVATION AT HANDRAIL JOINT

(Details not shown same as "FRONT ELEVATION")

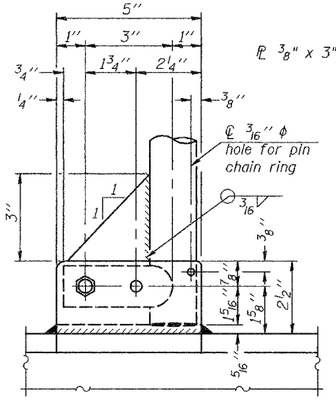

SIDE ELEVATION

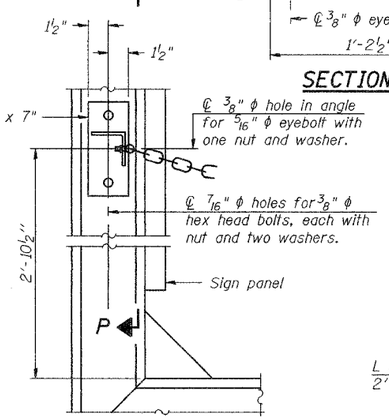

SAFETY CHAIN ATTACHMENT

(With Sign Present)
Items not shown same as "SIDE ELEVATION" and "SAFETY CHAIN"

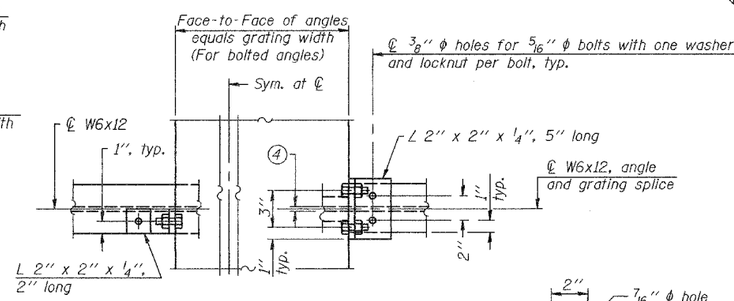

GRATING CONTINUOUS AT GRATING SPLICE

VIEW W-W

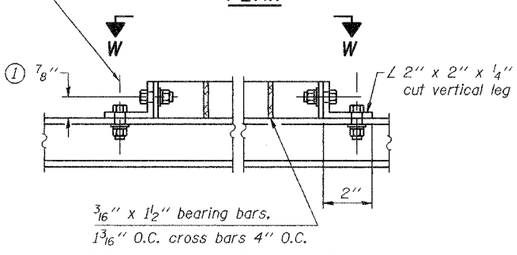

WELDED BAR GRATING DETAILS

FRONT ELEVATION

(See above Elevations for dimensions.)

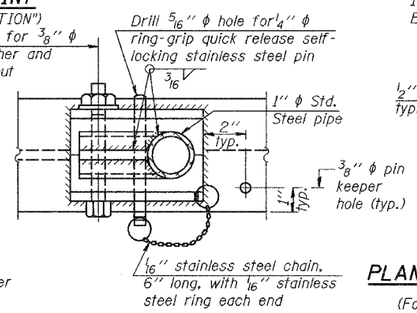

PLAN AT SINGLE HANDRAIL HINGE

DETAIL E

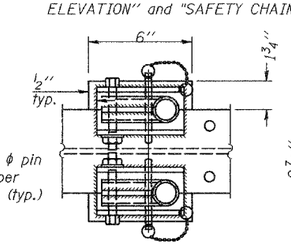

PLAN AT HANDRAIL JOINT

(For Details, see Elevations.)

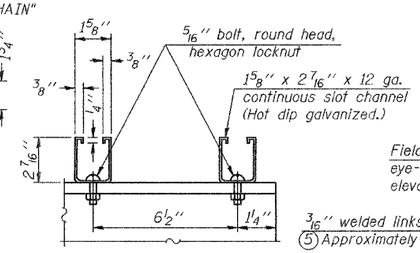

SECTION F-F

LIGHTING FIXTURE MOUNTS

(If required)

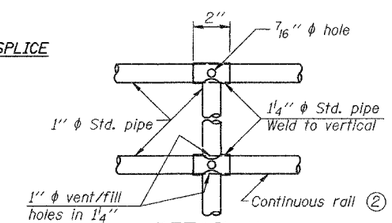

DETAIL H

Welds 3/16" continuous

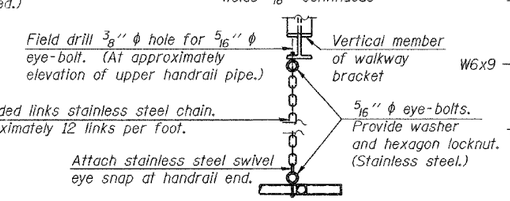

SAFETY CHAIN

One (1) required for each end of each walkway.

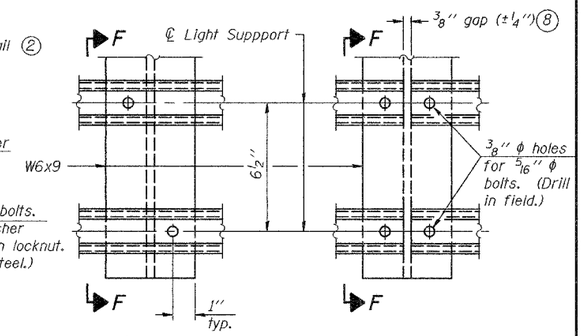

DETAIL F DETAIL G

NOTES

(1) Drilling holes in grating may be done in shop or field, based on Contractor's preference and subject to accurate alignment. Field drilled holes must be touched up with galvanized paint.

(2) Horizontal rail member shall be continuous thru 1 1/4" ϕ pipe. Provide 7/16" ϕ hole in 1 1/4"ϕ pipe for 3/8" ϕ bolt. Field drill 7/16" ϕ hole in horizontal rail member. Provide washer and locknut for bolt. (Use 5/16" eyebolts in 7/16" ϕ holes on top rail at ends only.)

(3) Install standard force-fit end caps or weld 1/8" end plates with 1/8" c.f.w. and grind smooth. (All rail ends.)

(4) 3/8" (±1/4") gap between grating panels at splice.

(5) Chain to be type 304L stainless steel suitable for prolonged exterior exposure. Approximately 3'-6" long chain per location. Maximum sag with handrail erected = 4".

(6) PL 1/8" x 1/2" x 2" welded to handrail posts to protect locations that contact grating.

(7) Extrusions may be used in lieu of details shown, with approval by Engineer.

(8) Field cut ends of light support channels shall be free of burrs or hazardous projections and coated with zinc-rich primer or equivalent.

NUMBER	REVISION	DATE

DESIGNED		ATH
CHECKED		VHV
DRAWN		Steffen
CHECKED	ATH	VHV

BM-4

6/01/2007

MAY 16, 2008
EXAMINED A. Carl Prugy
ENGINEER OF STRUCTURAL SERVICES
PASSED Ralph E. Anderson
ENGINEER OF BRIDGES AND STRUCTURES

BRIDGE MOUNT SIGN STRUCTURES
WALKWAY DETAILS

BRIDGE MOUNT SIGN DETAILS
115th ST. OVER FAI RT. 94
COOK COUNTY
SN 016-2042

c:\projects\kms\016-2042.dgn 16-May-08 09:09:25