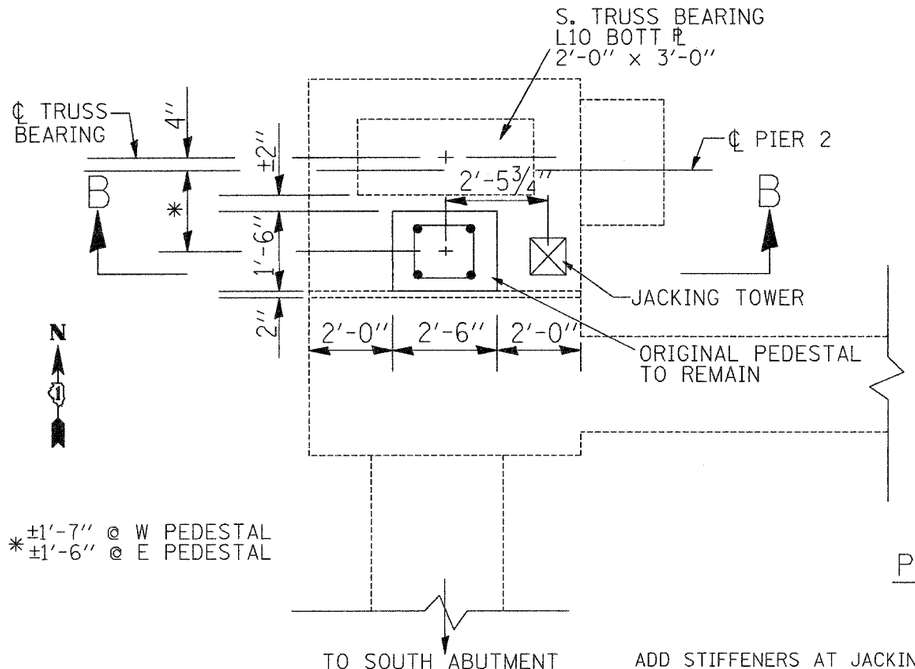

PLAN VIEW
PIER 2

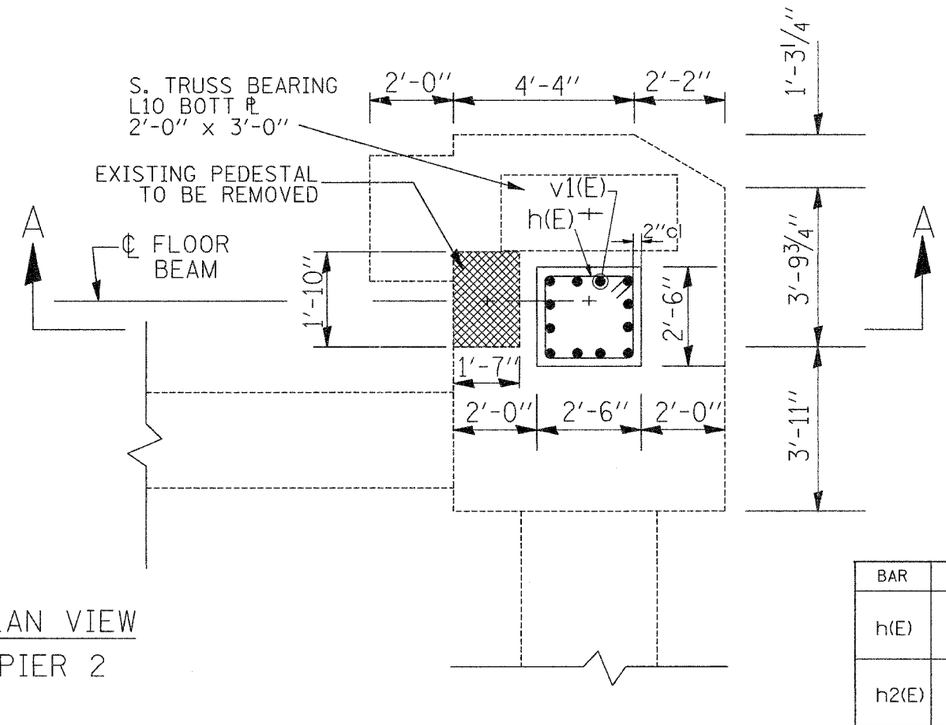

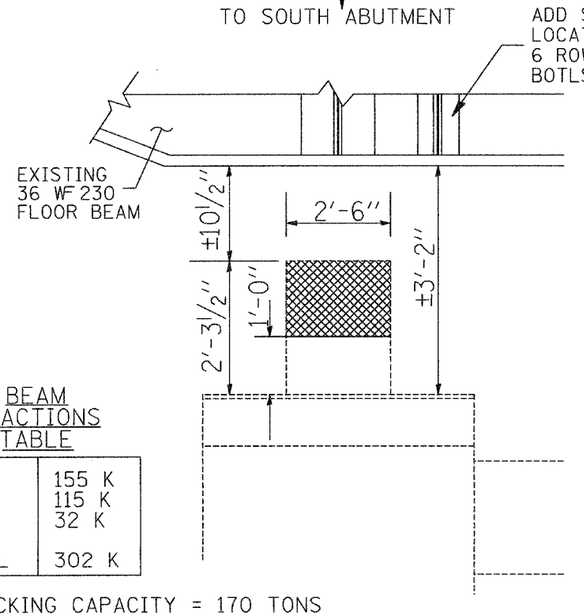

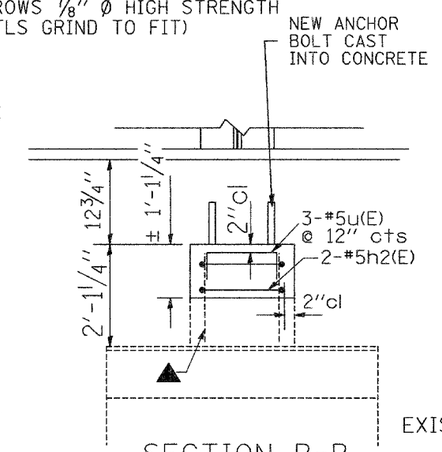

SECTION B-B
PROPOSED

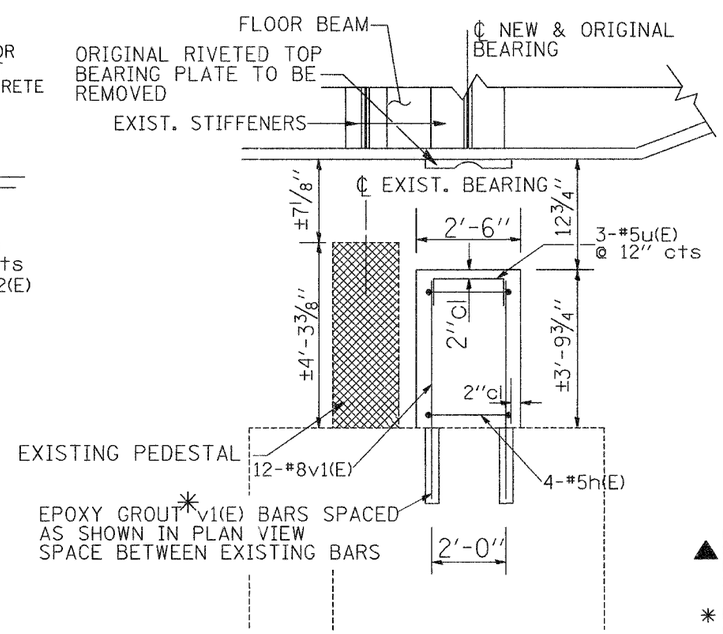

SECTION A-A

PIER 2 BAR LIST

BAR	NO	SIZE	LENGTH	SHAPE
h(E)	4	#5	9'-0"	
h2(E)	2	#5	6'-6"	
v1(E)	12	#8	4'-4"	
u(E)	6	#5	5'-2"	

CONCRETE REMOVAL	CU YD	0.7
CONCRETE STRUCTURES	CU YD	1.0
REINFORCEMENT BARS, EPOXY COATED	POUND	220
TEMPORARY SHORING AND CRIBBING	EA	2

BEAM REACTIONS TABLE

D.L.	155 K
L.L.	115 K
IMP	32 K
TOTAL	302 K

MIN. JACKING CAPACITY = 170 TONS

SECTION B-B
(EXISTING SHOWING REMOVAL)

REINFORCEMENT BARS DESIGNATED (E) SHALL BE EPOXY COATED

FOR REBAR DETAILS SEE SHEET 6 OF 11

CONCRETE REMOVAL

▲ EXIST. REINFORCEMENT TO BE CLEANED STRAIGHTNED & INCORPORATED INTO NEW CONSTRUCTION. CUT TO MAINTAIN 2" CLEARANCE

* DRILL & EPOXY GROUT 9" MINIMUM INTO THE EXISTING CONCRETE ACCORDING TO ART. 584 OF THE STD. SPECS.

ALL PROPOSED PEDESTAL HEIGHTS TO BE FIELD VERIFIED

FILE NAME = c:\projects\d131906\d131906aa.dgn	USER NAME = mdyja	DESIGNED -	REVISED -
		DRAWN -	REVISED -
	PLOT SCALE = 50.00 ' / IN.	CHECKED -	REVISED -
	PLOT DATE = 5/2/2008	DATE -	REVISED -

STATE OF ILLINOIS
DEPARTMENT OF TRANSPORTATION

PIER 2 REPAIRS
SN 016-0421

SCALE: | SHEET NO. 3 OF 5 SHEETS | STA. | TO STA.

F.A.P RTE.	SECTION	COUNTY	TOTAL SHEETS	SHEET NO.
350	3068 B-I	COOK	11	7
		CONTRACT NO. 60B29		

FED. ROAD DIST. NO. 1 | ILLINOIS | FED. AID PROJECT

...\projects\d131906\d131905aa.dgn 5/2/2008 11:31:10 AM