LE035

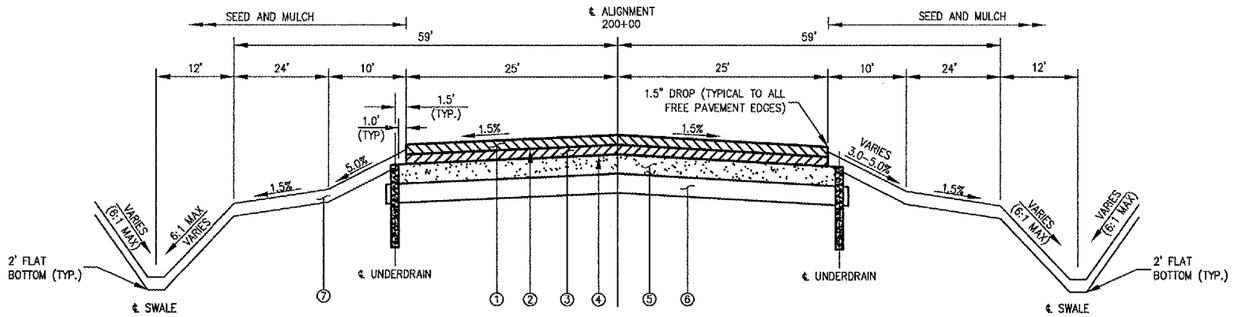

TYPICAL SECTION - TAXIWAY E

(SECTION SHOWN LOOKING NORTH)

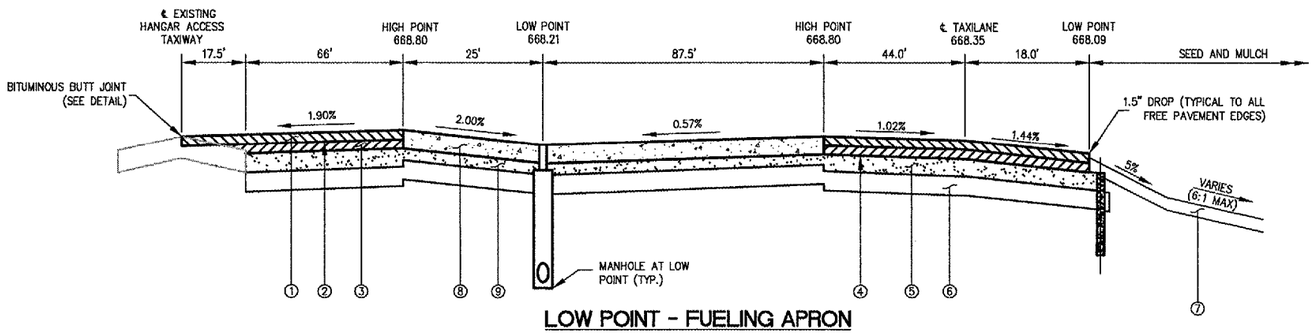

LOW POINT - FUELING APRON

(SECTION SHOWN LOOKING EAST)

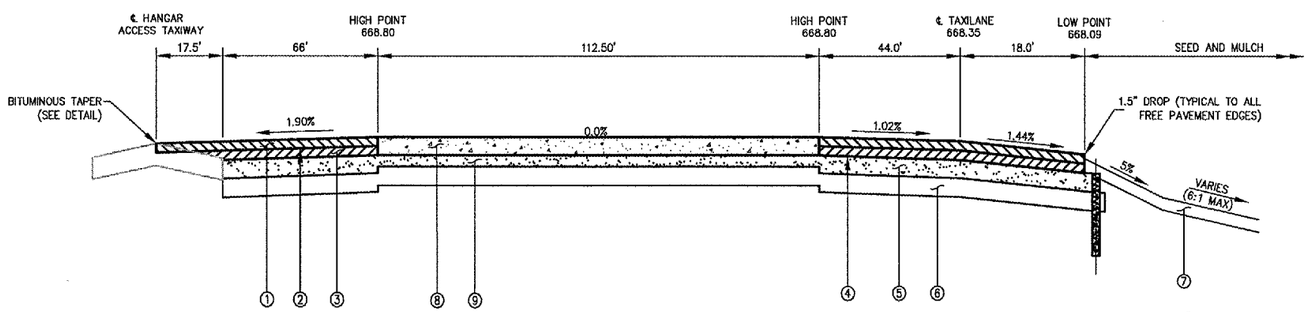

HIGH POINT - FUELING APRON

(SECTION SHOWN LOOKING EAST)

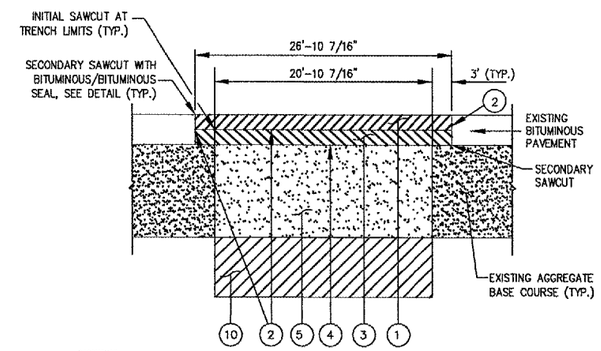

NOTES

1. ALL WORK RELATED TO THE PAVEMENT REMOVAL AND REPLACEMENT IS INCLUDED IN ITEM AR401910 EXCEPT FOR PAVEMENT SAWING.
2. BITUMIOUS PAVEMENT SAWING TO BE PAID AS ITEM AR401665.
3. WIDTH OF PATCH SHALL BE REDUCED BASED ON ACTUAL WIDTH OF PIPE TRENCH. WIDTH NOT TO EXCEED THAT SHOWN ON THE DETAIL.

BITUMINOUS PAVEMENT REMOVAL AND REPLACEMENT

(ITEM AR401910)

① PROPOSED 2 INCH BITUMINOUS SURFACE COURSE, ITEM AR401610

② PROPOSED BITUMINOUS TACK COAT, ITEM AR603510

③ PROPOSED 2 INCH BITUMINOUS BASE COURSE, ITEM AR201610

④ PROPOSED BITUMINOUS PRIME COAT, ITEM AR602510

⑤ PROPOSED 12 INCH CRUSHED AGGREGATE BASE COURSE, ITEM AR209612

⑥ PROPOSED PREPARED SUBGRADE:
CUT AREAS– REMOVE TOPSOIL TO FINISHED SUBGRADE ELEV., ADDITIONAL UNDERCUT BELOW FINISHED SUBGRADE IN AREAS SHOWN ON PLANS AND/OR AS DETERMINED BY ROLL TEST (SEE UNDERCUT DETAIL)*
FILL AREAS– REMOVE TOPSOIL, ADDITIONAL UNDERCUT IN AREAS SHOWN ON PLANS AND/OR AS DETERMINED BY ROLL TEST (SEE UNDERCUT DETAIL)*

⑦ PROPOSED 4" TOPSOIL, ITEM AR905510

⑧ PROPOSED 6 INCH P.C.C. PAVEMENT, ITEM AR501506

⑨ PROPOSED 6 INCH CRUSHED AGGREGATE BASE COURSE, ITEM AR209606

⑩ TRENCH BACKFILL FOR PIPE TRENCH, INCIDENTAL TO PIPE

* ALL TOPSOIL TO BE REMOVED WITHIN 5' OF PROPOSED PAVEMENT AREAS AND UNDER FUTURE HANGAR SITES (QUANTITY INCLUDED IN ITEM AR152410). NO TOPSOIL OR UNSUITABLE TO BE PLACED UNDER THE PAVEMENT SECTION WITHIN 5' OF PAVEMENT EDGES.

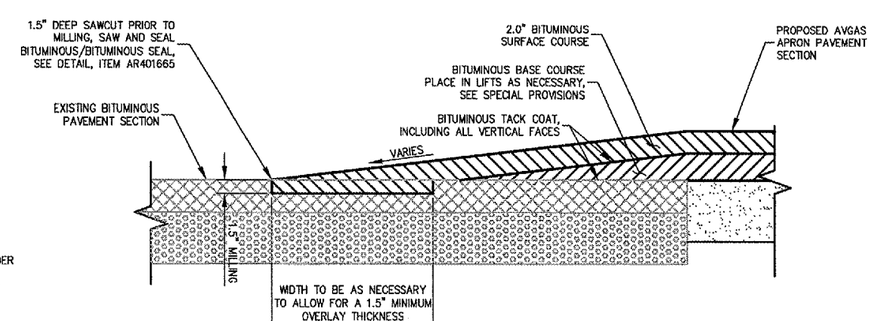

BITUMINOUS TAPER DETAIL

HANSON

HANSON PROFESSIONAL SERVICES INC.

815 Commerce Drive, Suite 200
Oak Brook, Illinois 60523
Telephone: 630.990.3800
Fax: 630.990.3801

Chicago-Romeoville Airport

JOLIET REGIONAL PORT DISTRICT

1 Hangar Road
Romeoville, Illinois 60446
Telephone: 815.838.9497
Fax: 815.838.9524

EXTEND TAXIWAY E: CONSTRUCT GA APRON, AVGAS FUELING APRON AND AUTO PARK 100

AIP PROJECT NO. 3-17-0140-B38
IDA PROJECT NO. LOT-3441

No.	Drawing Issue Description	Date	By

Date
MARCH 25, 2005

Sheet Title

TYPICAL SECTIONS

840-04D8041
Project Number

LDH 01/19/05
Layout By Date

LDH/TMM 02/14/05
Designed By Date

RMH 03/16/05
Reviewed By Date

LDH ---- ----
Drawn By

6
Sheet No.

I:\04JOBS\(0D840)\04D8041\DRAWINGS\SHEETS\06-TYP SECTIONS 200 & FUEL FARM-REVISED.DWG MAR 28, 2005 12:17PM TMM