93434

COUNTY	ROUTE	SECTION	TOTAL SHEETS	SHEET NO.
ADAMS	FAS 2599	08-00199-00-RS	13	8
STATION 355+00 TO STATION 385+00				

PROJECT NO. RS-2599(103)

50 0 50 100
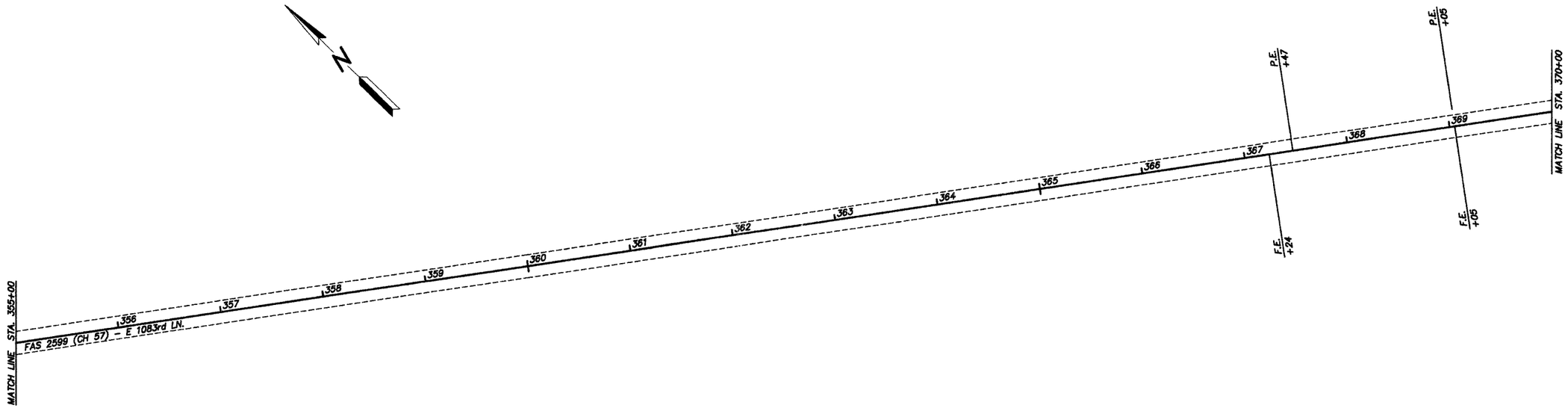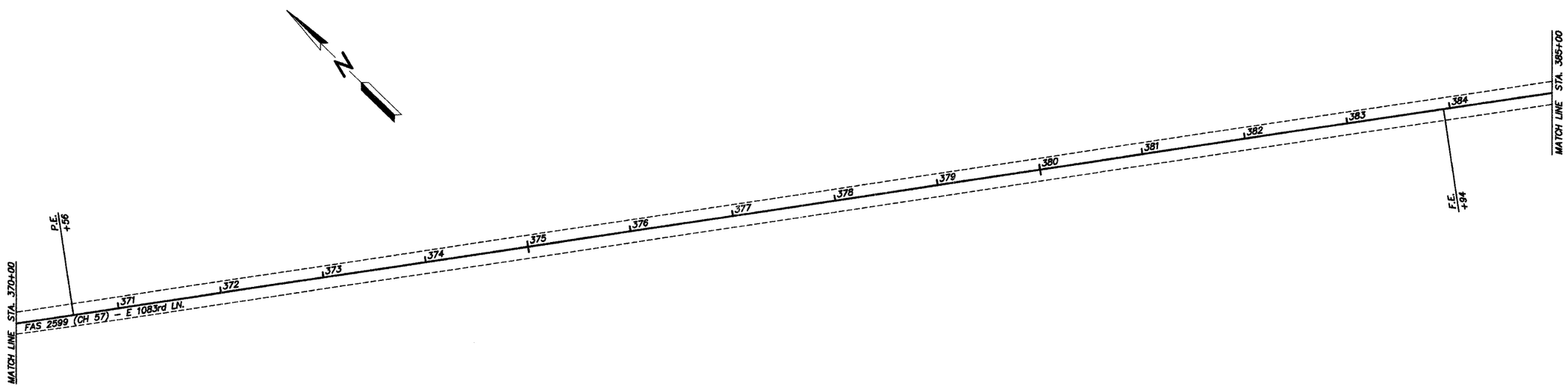
GRAPHIC SCALE IN FEET