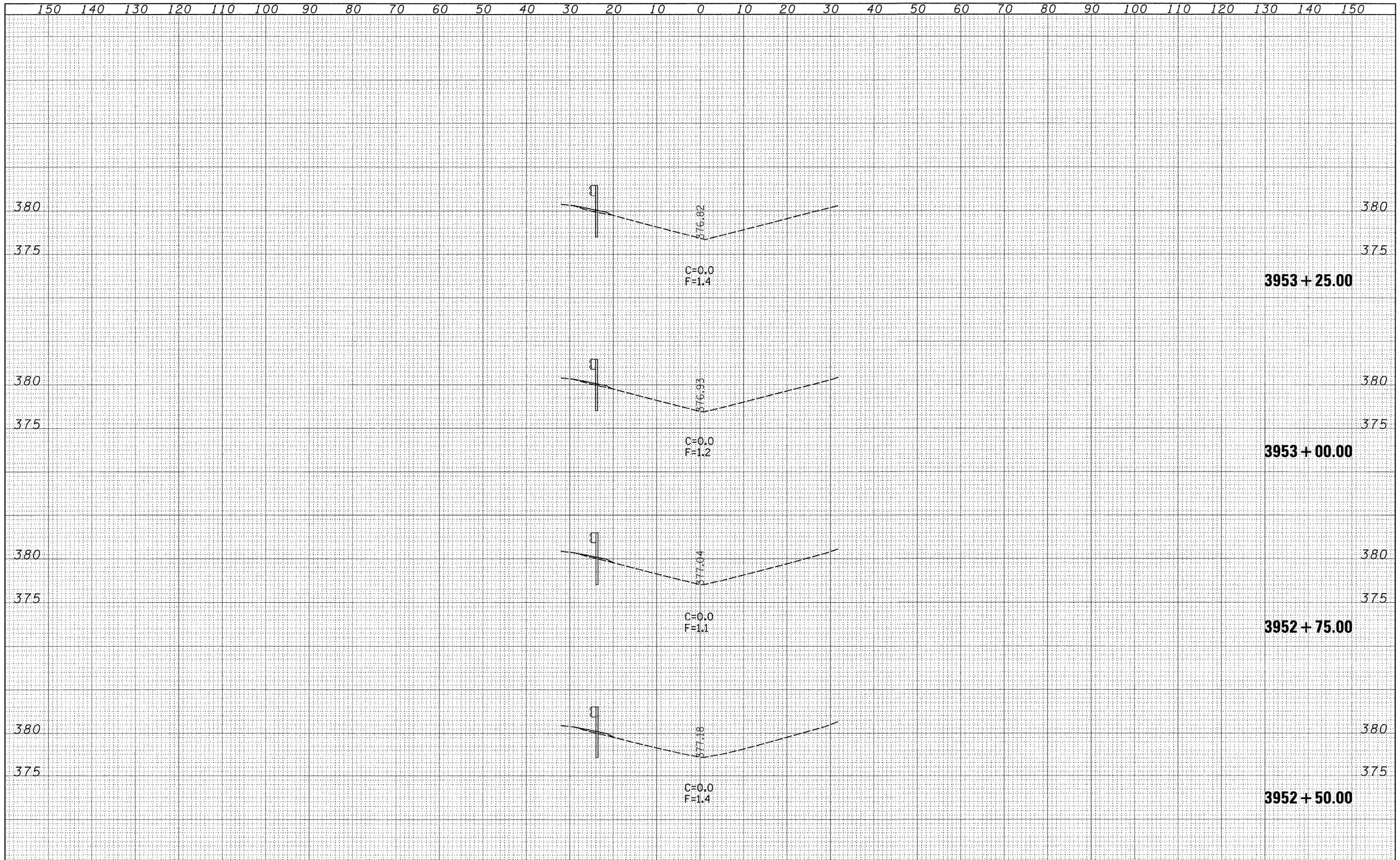

FINAL SURVEY		BY	DATE
NOTE BOOK NO.	SURVEYED		
	PLOTTED		
	TEMPLATE		
	AREAS		
	AREAS CHECKED		

ORIGINAL SURVEY		BY	DATE
NOTE BOOK NO.	SURVEYED		
	PLOTTED		
	TEMPLATE		
	AREAS		
	AREAS CHECKED		

FILE NAME = c:\projects\74285d\ss03sheet_74285.dgn	USER NAME = davisoryl	DESIGNED - JLD	REVISED -
		DRAWN - JLD	REVISED -
	PLOT SCALE = 10.0000 ' / IN.	CHECKED -	REVISED -
	PLOT DATE = 1/30/2008	DATE -	REVISED -

STATE OF ILLINOIS
DEPARTMENT OF TRANSPORTATION

S.N. 096-0031

SCALE: H:10 V:5 | SHEET NO. 6 OF 7 SHEETS | STA. 3952+50.00 TO STA. 3953+25.00

F.A.I. RTE.	SECTION	COUNTY	TOTAL SHEETS	SHEET NO.
64	D7 SAFETY 2008-4	WAYNE	51	41
		CONTRACT NO. 74285		
FED. ROAD DIST. NO.	ILLINOIS	FED. AID PROJECT		