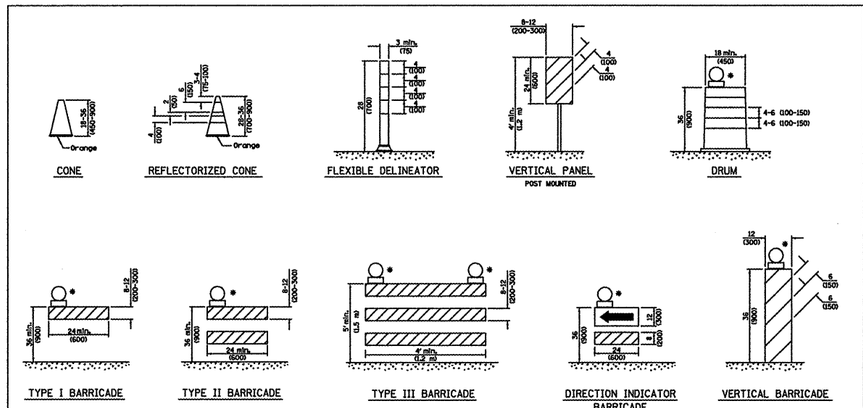

GENERAL NOTES

All heights shown shall be measured above the pavement surface.

All dimensions are in inches (millimeters) unless otherwise shown.

TRAFFIC CONTROL DEVICES (Sheet 1 of 3)

STANDARD 701901-01

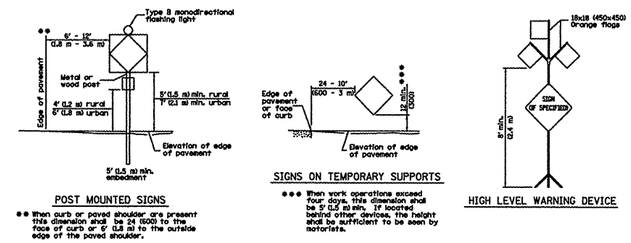

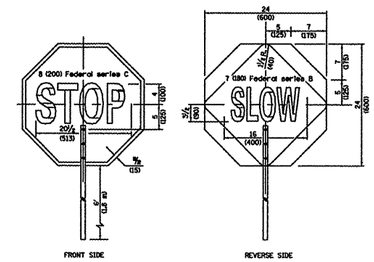

All dimensions are in inches (millimeters) unless otherwise shown.

TRAFFIC CONTROL DEVICES (Sheet 2 of 3)

STANDARD 701901-01

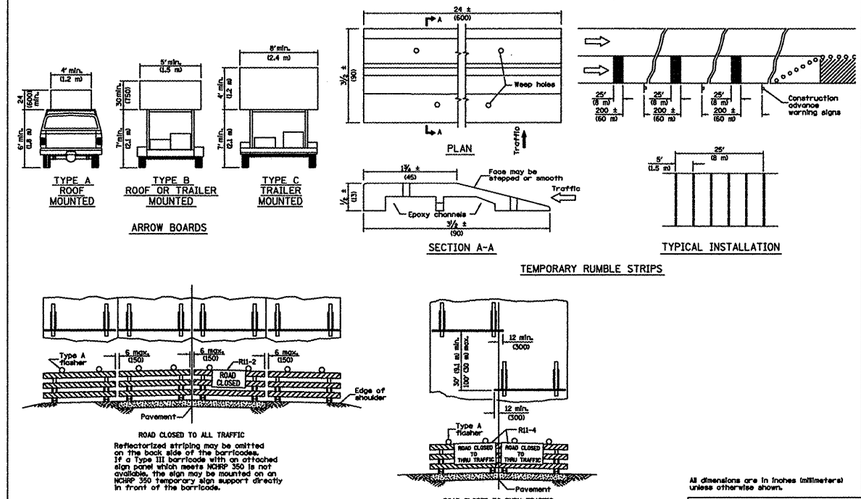

All dimensions are in inches (millimeters) unless otherwise shown.

TRAFFIC CONTROL DEVICES (Sheet 3 of 3)

STANDARD 701901-01

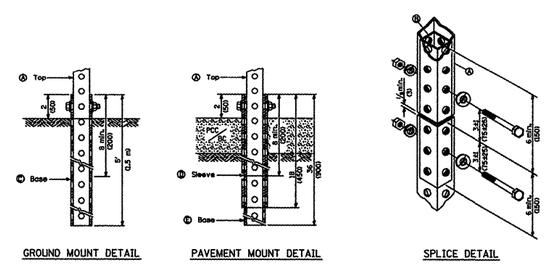

Ⓐ	2 x 2 x var. (51 x 51 var.)
Ⓑ	1¾ x 1¾ x 12 (44 x 44 x 300)
Ⓒ	2¼ x 2¼ x 60 (57 x 57 x 1500)
Ⓓ	2½ x 2½ x 18 (64 x 64 x 450)
Ⓔ	2¼ x 2¼ x 36 (57 x 57 x 900)

GENERAL NOTES

All bolts ⅜ (M10) hex head zinc or cadmium plated.

All dimensions are in inches (millimeters) unless otherwise shown.

TELESCOPING STEEL SIGN SUPPORT

STANDARD 728001-01

INGERSOLL AIRPORT
CANTON, ILLINOIS

STANDARDS

HUTCHISON ENGINEERING, INC.
JACKSONVILLE, ILLINOIS

DRAWN BY: T.J.D.
DATE : MARCH, 2009

ILL. PROJ. NO. CTK-3861
AIP PROJ. NO. 3-17-0008-B11

\26867008 1"=1'