ROUTE NO.	SECTION	COUNTY	TOTAL SHEETS	SHEET NO.
TR 134A	*	MORGAN	28	12
FED. ROAD DIST. NO. 7		ILLINOIS	PROJECT BROS-0137(027)	

SHEET NO. 6 OF 12 SHEETS

*06-06120-00-BR

CONTRACT # 93481

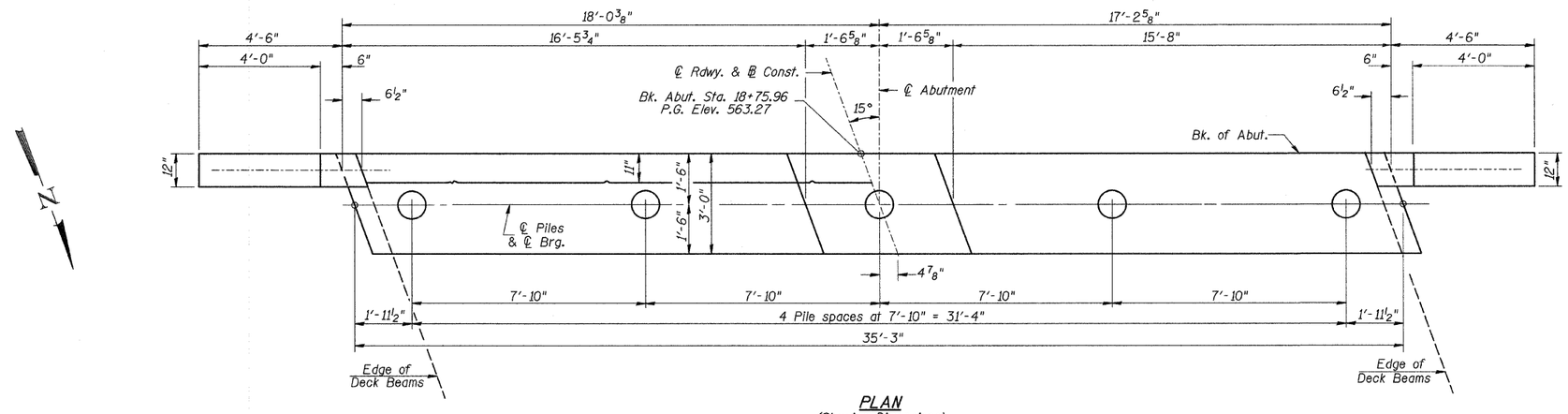

PLAN
(Showing Dimensions)

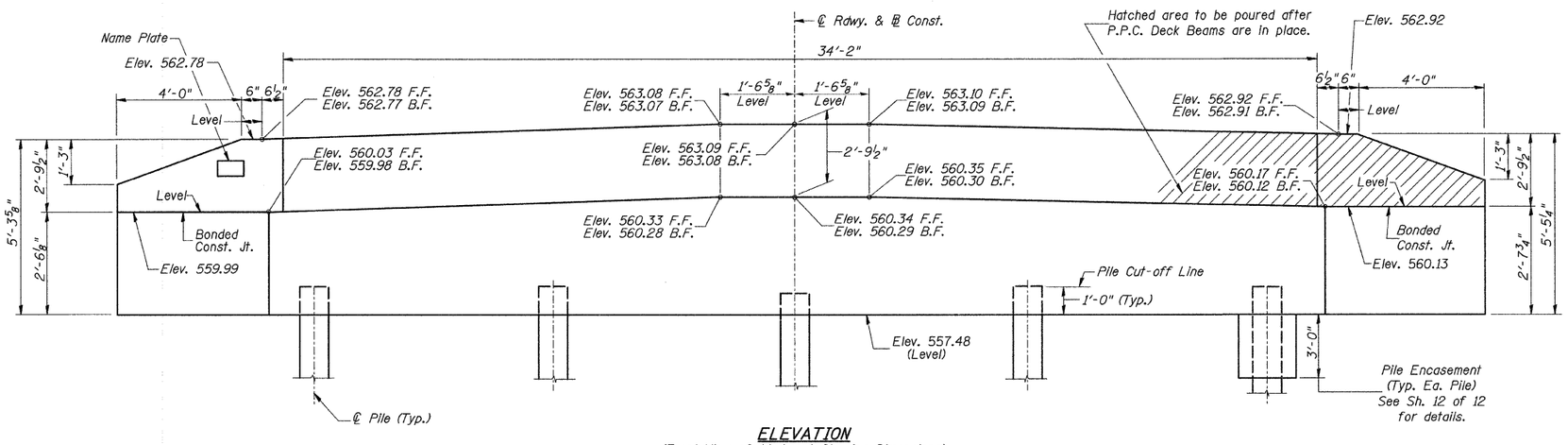

ELEVATION
(Front View of Abutment Showing Dimensions)

SOUTH ABUTMENT LAYOUT
TOWNSHIP ROAD 134A OVER
MAUVAISE TERRE CREEK
SECTION 06-06120-00-BR
MORGAN COUNTY
STATION 20+00.00

2459B006