| ROUTE NO. | SECTION | COUNTY | TOTAL SHEETS | SHEET NO. |
|---|---|---|---|---|
| TR 134A | * | MORGAN | 28 | 9 |
| FED. ROAD DIST. NO. 7 | | ILLINOIS | PROJECT BROS-0137(027) | |

SHEET NO. 3 OF 12 SHEETS

*06-06120-00-BR CONTRACT # 93481

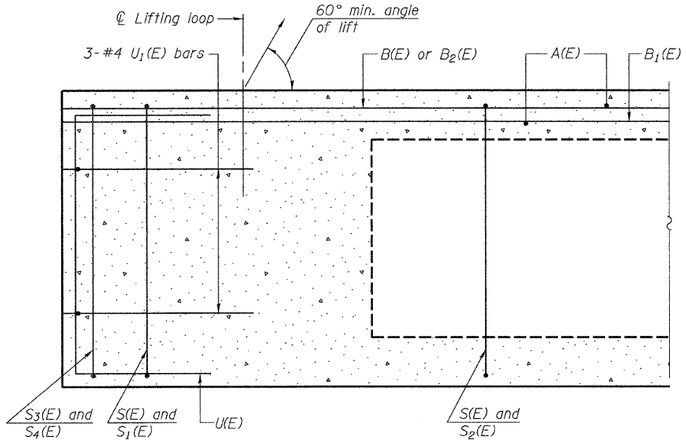


SECTION C-C

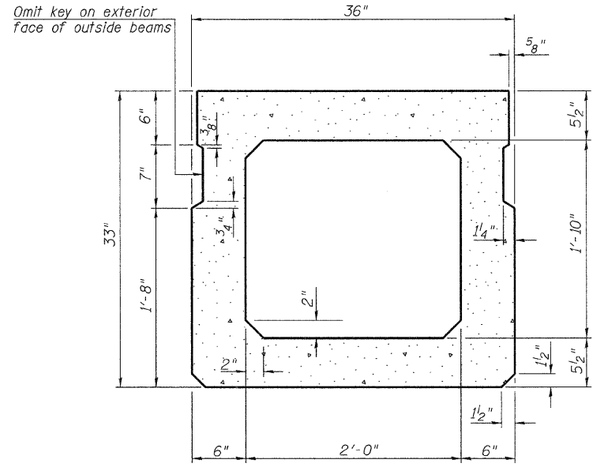


SECTION A-A
(Showing dimensions)

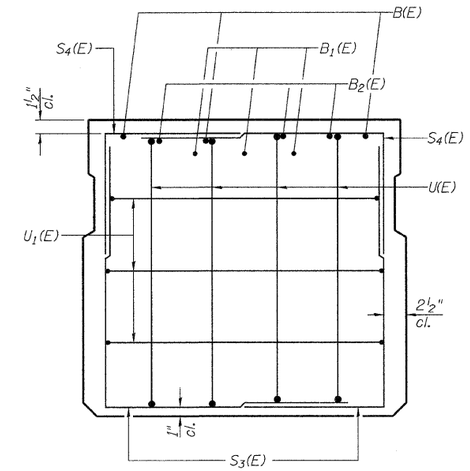


VIEW B-B

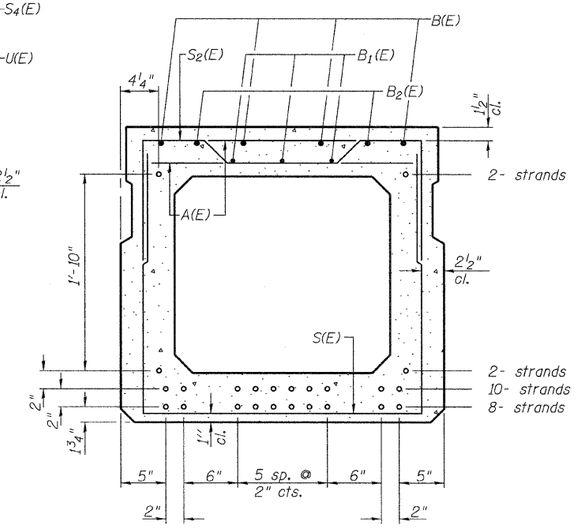


SECTION A-A

22-1/2"Φ Strands Each Strand Stressed to 30,900 Lbs.
8-Strands $1\frac{3}{4}$" up, 10-Strands $3\frac{3}{4}$" up,
2-Strands $5\frac{3}{4}$" up, 2-Strands $2'-3\frac{3}{4}$" up

Note: Place the number of strands specified in each row symmetrically about the centerline of beam in the permissable strand locations shown.

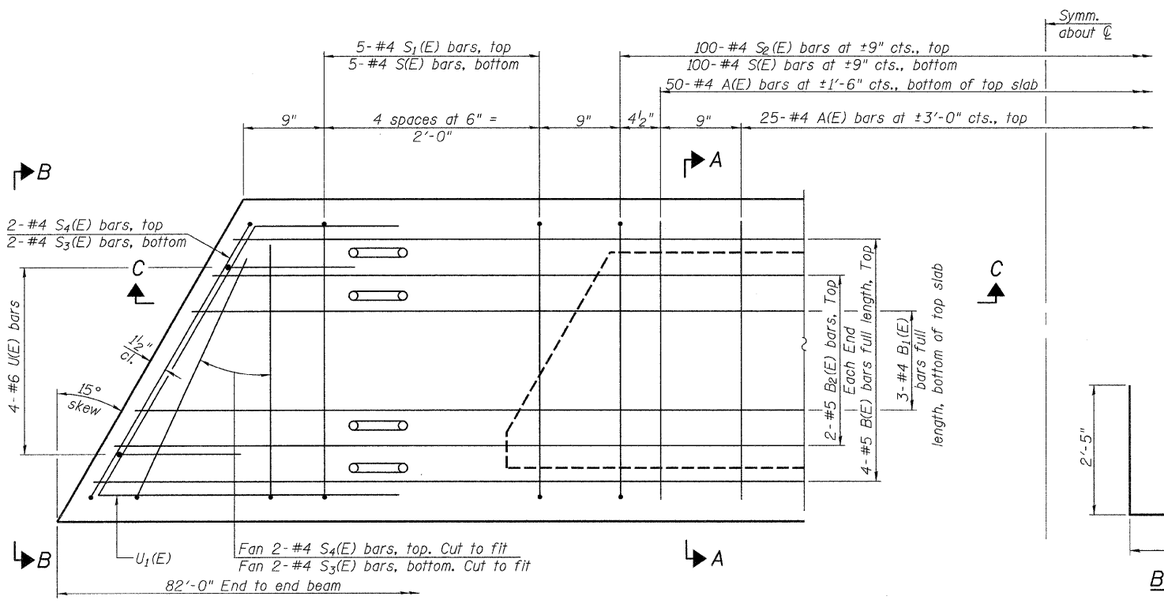


PLAN VIEW

Note: Spacing of S(E) and $S_2(E)$ bars may be adjusted up to 4" in the immediate area of the transverse tie diaphragms to miss the block outs for the transverse ties.

## BAR LIST - ONE BEAM ONLY

(For information only)

| Bar | No. | Size | Length | Shape |
|---|---|---|---|---|
| A(E) | 75 | #4 | 2'-7" | — |
| B(E) | 4 | #5 | *81'-9" | — |
| $B_1(E)$ | 3 | #4 | *81'-9" | — |
| $B_2(E)$ | 4 | #5 | 16'-6" | — |
| S(E) | 110 | #4 | 7'-5" | ⊔ |
| $S_1(E)$ | 10 | #4 | 6'-3" | ⊓ |
| $S_2(E)$ | 100 | #4 | 6'-6" | ⊓ |
| $S_3(E)$ | 8 | #4 | 5'-0" | ⊔ |
| $S_4(E)$ | 8 | #4 | 4'-5" | ⊔ |
| U(E) | 8 | #6 | 5'-0" | ⊏ |
| $U_1(E)$ | 6 | #4 | 5'-9" | ∠ |

*Total Length, Lap as Necessary.

Note: See sheet 2 of 12 for additional details and Bill of Material.

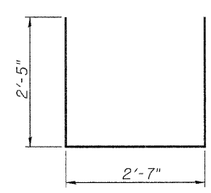


BAR S(E)

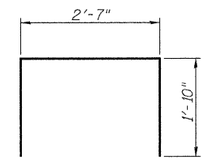


BAR $S_1(E)$

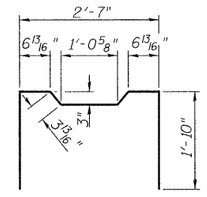


BAR $S_2(E)$

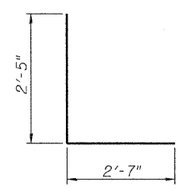


BAR $S_3(E)$

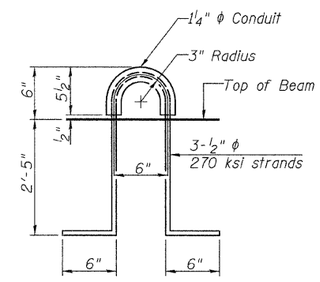


LIFTING LOOP DETAIL

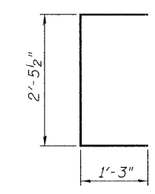


BAR U(E)

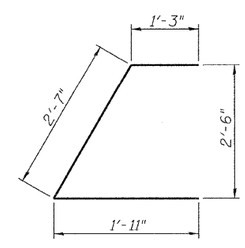


BAR $U_1(E)$

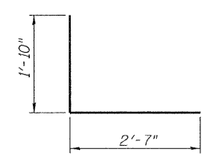


BAR $S_4(E)$

SUPERSTRUCTURE DETAILS
TOWNSHIP ROAD 134A OVER
MAUVAISE TERRE CREEK
SEC. 06-06120-00-BR
MORGAN COUNTY
STATION 20+00.00

2459B003