Notes:
Pour steps monolithically with cap.
All edges shall have standard $\frac{3}{4}$" chamfer.
See Sh 17 of 22 for pile details.

ROUTE NO.	SECTION	COUNTY	TOTAL SHEETS	SHEET NO.
CH 33	*	LASALLE	53	23
FED. ROAD DIST. NO. 7		ILLINOIS	PROJECT	BRS-1365(111)

*05-00626-00-BR CONTRACT *87368

SHEET NO. 14 OF 22 SHEETS

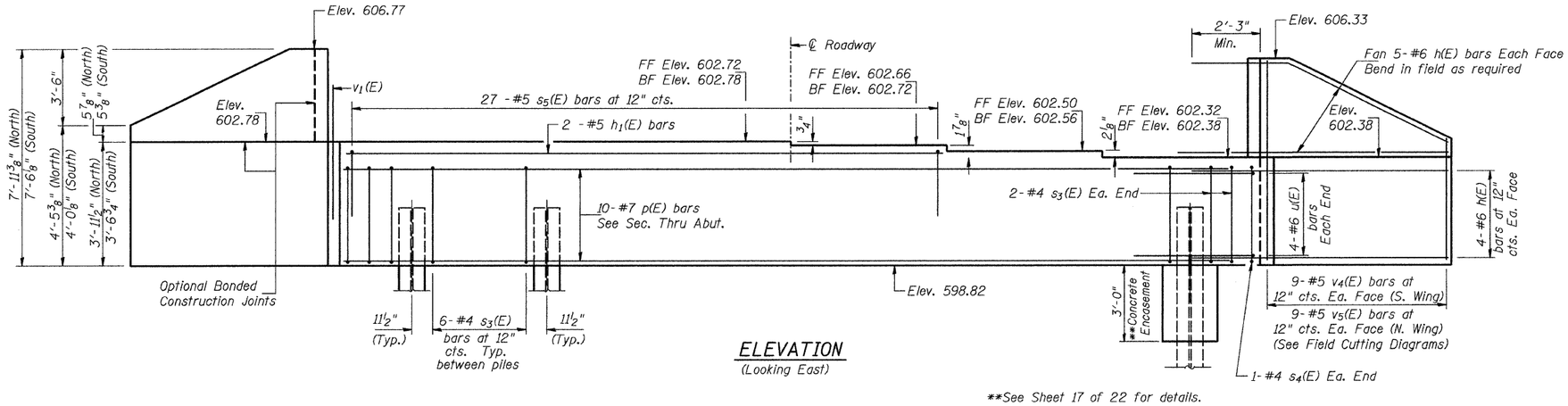

**See Sheet 17 of 22 for details.

ELEVATION
(Looking East)

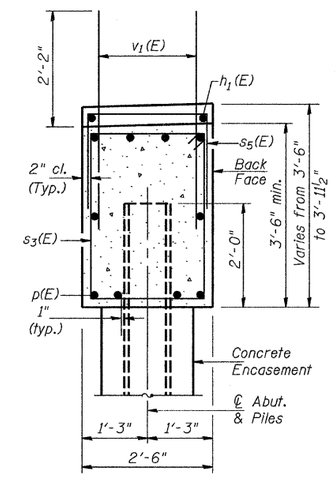

SEC. THRU ABUT.
(At Right Angles)

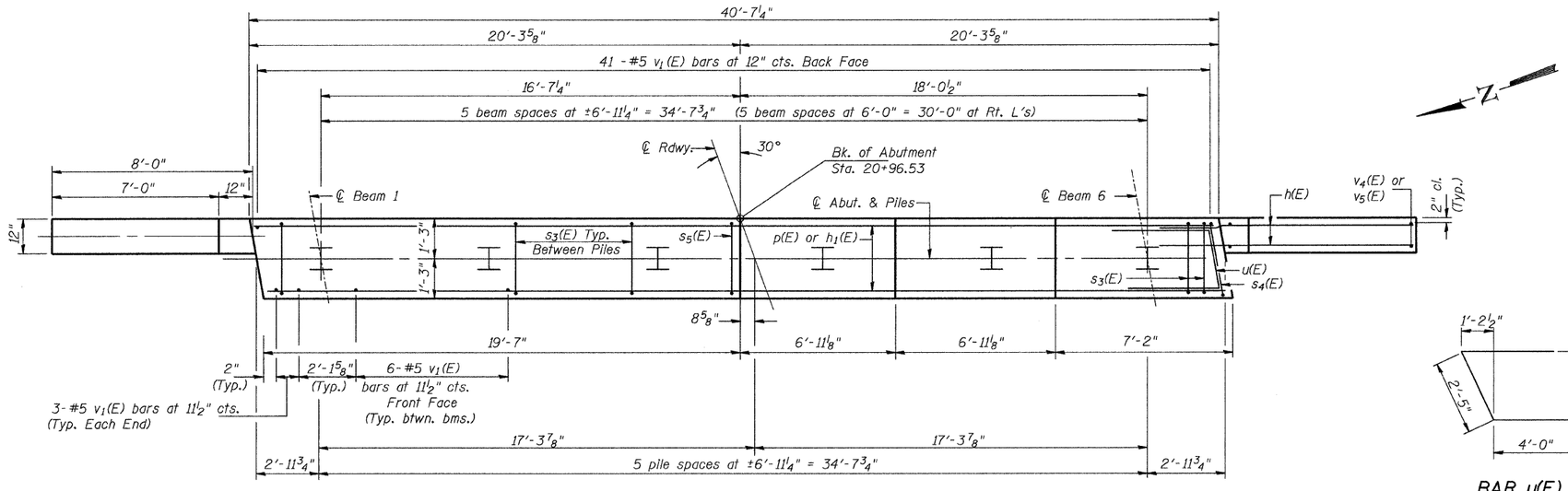

PLAN

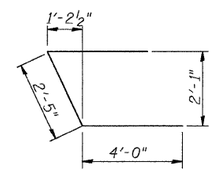

BAR u(E)

EAST ABUTMENT BILL OF MATERIAL

Bar	No.	Size	Length	Shape
h(E)	36	#6	10'-3"	
h_1(E)	2	#4	26'-3"	
p(E)	10	#7	40'-4"	
s_3(E)	34	#4	11'-5"	
s_4(E)	2	#4	12'-1"	
s_5(E)	27	#4	6'-6"	
u(E)	8	#6	10'-5"	
v_1(E)	77	#5	4'-4"	
v_4(E)	9	#5	11'-0"	
v_5(E)	9	#5	11'-10	
Concrete Structures			CU YD	18.2
(1) Reinforcement Bars, Epoxy Coated			POUND	2,490
Structure Excavation			CU YD	65
Furnishing Steel Piles HP10x42			FOOT	120
Test Pile Steel HP10x42			EACH	1
Pile Shoes			EACH	6
Driving Piles			FOOT	120
Concrete Encasement			CU YD	2.1

(1) See Special Provisions

PILE DATA

Type & Size: Steel HP10x42 w/ Pile Shoes
Nominal Required Bearing: 335 kips
Factored Resistance Available: 167 kips
Est. Length: 24'
No. Required: 6 (Includes 1 test pile)

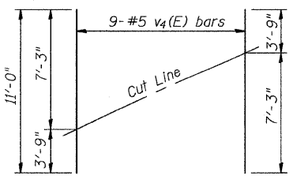

FIELD CUTTING DIAGRAM
Order v_4(E) full length. Cut as shown and use remainder of bars in opposite face.

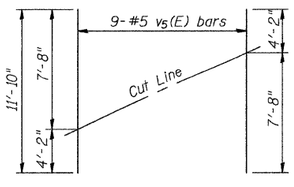

FIELD CUTTING DIAGRAM
Order v_5(E) full length. Cut as shown and use remainder of bars in opposite face.

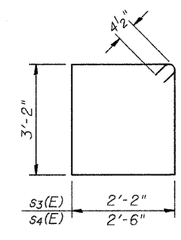

BARS s_3(E) & s_4(E)

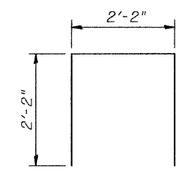

BAR s_5(E)

EAST ABUTMENT

2498B014