CONTRACT NO. 85428

LOCAL RTE.	SECTION	COUNTY	TOTAL SHEETS	SHEET NO.
M.S. 1040	05-00010-00-PV	HENRY	136	89
STA. 37+50		TO STA. 39+00		
FED. ROAD DIST. NO. 2	ILLINOIS	FED. AID PROJECT		

SHIVE-HATTERY

Cedar Rapids, IA · Iowa City, IA · Des Moines, IA
Moline, IL · Bloomington, IL · Chicago, IL

SHIVE-HATTERY, INC. 1701 RIVER DRIVE, SUITE 200 MOLINE, IL 61265
PHONE (309) 764-7650 FAX (309) 764-8616
http://www.shive-hattery.com
ILLINOIS FIRM NUMBER: 184-000214

HORIZONTAL SCALE

0 10 20 40
SCALE IN FEET

VERTICAL SCALE

0 2.5 5 10
SCALE IN FEET

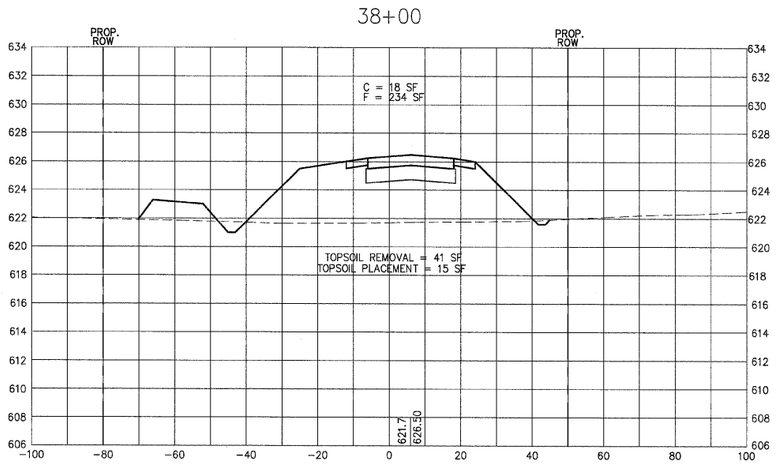

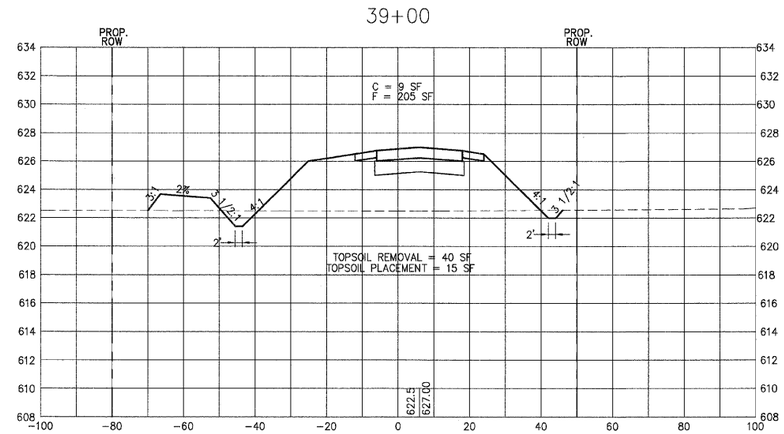

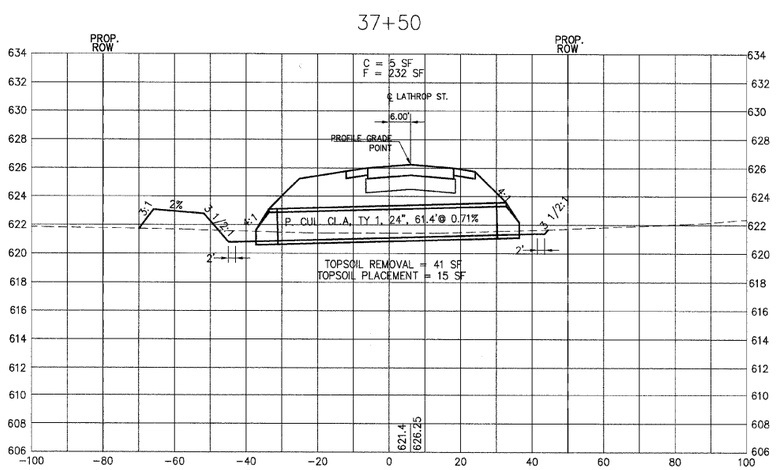

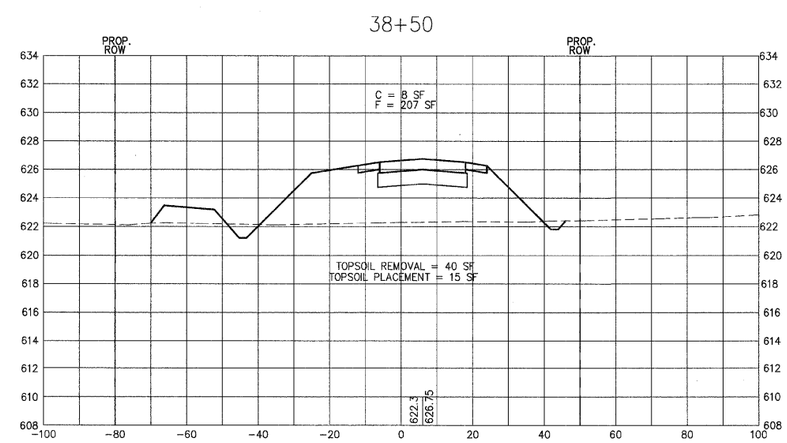

PLAN		BY	DATE
NOTE BOOK NO. ____	SURVEYED		
	PLOTTED		
	ALIGNMENT CHECKED		
	RT. OF WAY CHECKED		
	CADD FILE NAME		

PROFILE		BY	DATE
NOTE BOOK NO. ____	SURVEYED		
	PLOTTED		
	GRADES CHECKED		
	S.M. NOTED		
	STRUCTURE NOTATNS CHKD		

PLOT DATE = $DATE$
FILE NAME = $FILEL$
PLOT SCALE = $SCALE$
USER NAME = $USER$

LATHROP STREET CROSS SECTIONS