CONTRACT NO. 74172

F.A.S. RTE.	SECTION	COUNTY	TOTAL SHEETS	SHEET NO.
674	28BR	COLES	21	6

PROPOSED TYPICAL CROSS SECTION 3
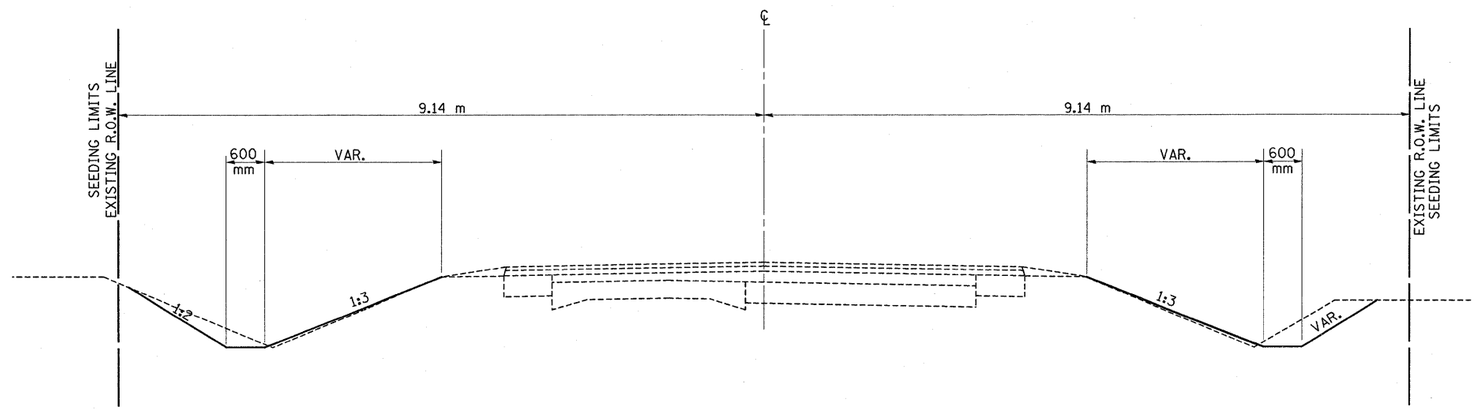
2 STATION 7+711.651 TO STATION 7+800.000