CONCRETE BOX CULVERTS

SN 043-1062 – STA 4+86.61 (IL RTE 78)

6' x 6' BOX CULVERT @ 10.8° SKEW

*BILL OF MATERIALS
(FOR INFORMATION ONLY)

Bar	No.	Size	Length	Shape
a_1	240	#5	7'-10"	
h	36	#5	23'-5"	
h_1	48	#4	21'-2"	
h_2	48	#5	23'-5"	
h_3	8	#6	6'-9"	
v	174	#4	6'-9"	
Concrete Box Culverts			Cu. Yd.	32.3
Reinforcement Bars			Pound	5,280
Bar Splicers			Each	33

* Does not include quantities for end sections. See sheet 3 for end section quantities.

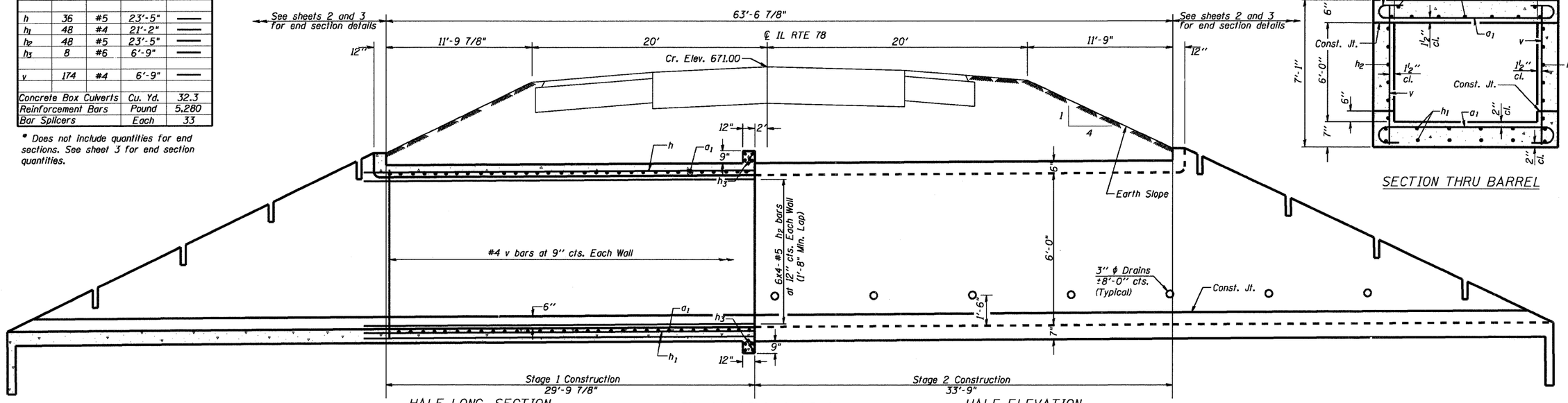

HALF LONG. SECTION

HALF ELEVATION

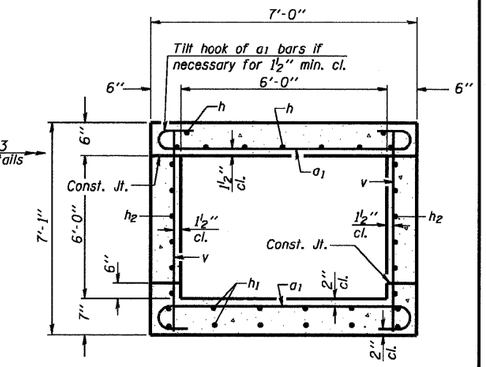

SECTION THRU BARREL

Dimensions at Rt. L's to ℄ Roadway

a bars in skew portion of slab shall be ordered full length & cut to fit. Balance of bar to be used in opposite end of culvert.

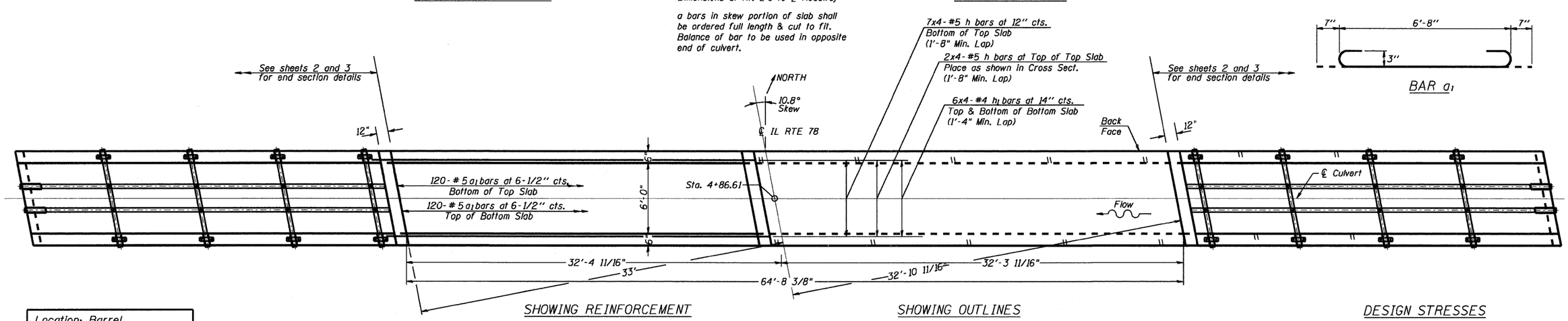

BAR a_1

SHOWING REINFORCEMENT

PLAN

SHOWING OUTLINES

Location: Barrel	
Size	Lap
#4	1'-4"
#5	1'-8"
#6	2'-0"

MINIMUM BAR LAP

NOTES

The barrel and end sections shall be poured monolithically.

Reinforcement Bars shall conform to the requirements of ASTM A706 Grade 60 (IL Modified).

Bars indicated thus 12 x 4-#5 etc. indicates 12 lines of bars with 4 lengths per line.

All construction joints shall be bonded.

H, h_1, and h_2 bar lengths include required lap for indicated bar size.

TO THE BEST OF MY KNOWLEDGE, INFORMATION AND BELIEF, THIS DESIGN IS STRUCTURALLY ADEQUATE FOR THE DESIGN LOADING SHOWN ON THE PLANS. THE DESIGN IS AN ECONOMICAL ONE FOR THE STYLE OF STRUCTURE AND COMPLIES WITH REQUIREMENTS OF THE CURRENT "AASHTO STANDARD SPECIFICATIONS FOR HIGHWAY BRIDGES".

STATE OF ILLINOIS
Michael G. Barnes
061-004608
9/24/98
EXPIRES 11/30/98

DESIGN STRESSES

fy = 60,000 psi
f'c = 3,500 psi

LOADING HS 20-44 & ALT.

FILE NAME =	USER NAME = $USER$	DESIGNED -	REVISED -
		DRAWN -	REVISED -
	PLOT SCALE = 1:50	CHECKED -	REVISED -
	PLOT DATE = $DATE$	DATE -	REVISED -

STATE OF ILLINOIS
DEPARTMENT OF TRANSPORTATION

CONCRETE BOX CULVERTS – SHEET 1 OF 3

SCALE: | SHEET NO. OF SHEETS | STA. TO STA.

F.A.P RTE.	SECTION	COUNTY	TOTAL SHEETS	SHEET NO.
642	(10, 11)T	JODAVIESS	283	82
		CONTRACT NO. 64D07		
FED. ROAD DIST. NO.	ILLINOIS	FED. AID PROJECT		