EXISTING CONTROLLER SEQUENCE

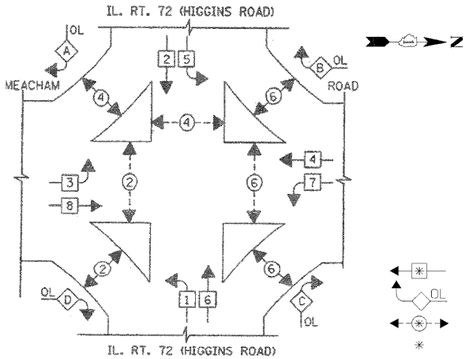

EXISTING PHASE DESIGNATION DIAGRAM

LEGEND

- SINGLE ENTRY PHASE
- OVERLAP
- PEDESTRIAN PHASE
- NUMBER REFERS TO ASSOCIATED PHASE

RIGHT TURN OVERLAP PHASE DESIGNATION

OVERLAP LETTER		PERMISSIVE PHASE		PROTECTED PHASE
A	=	2	+	3
B	=	4	+	5
C	=	6	+	7
D	=	8	+	1

EMERGENCY VEHICLE PREEMPTION SEQUENCE

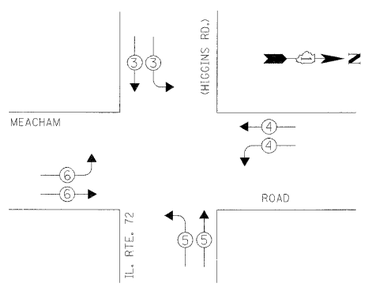

EXISTING EMERGENCY VEHICLE PREEMPTORS				
EMERGENCY VEHICLE PREEMPTOR	3	4	5	6
MOVEMENT				

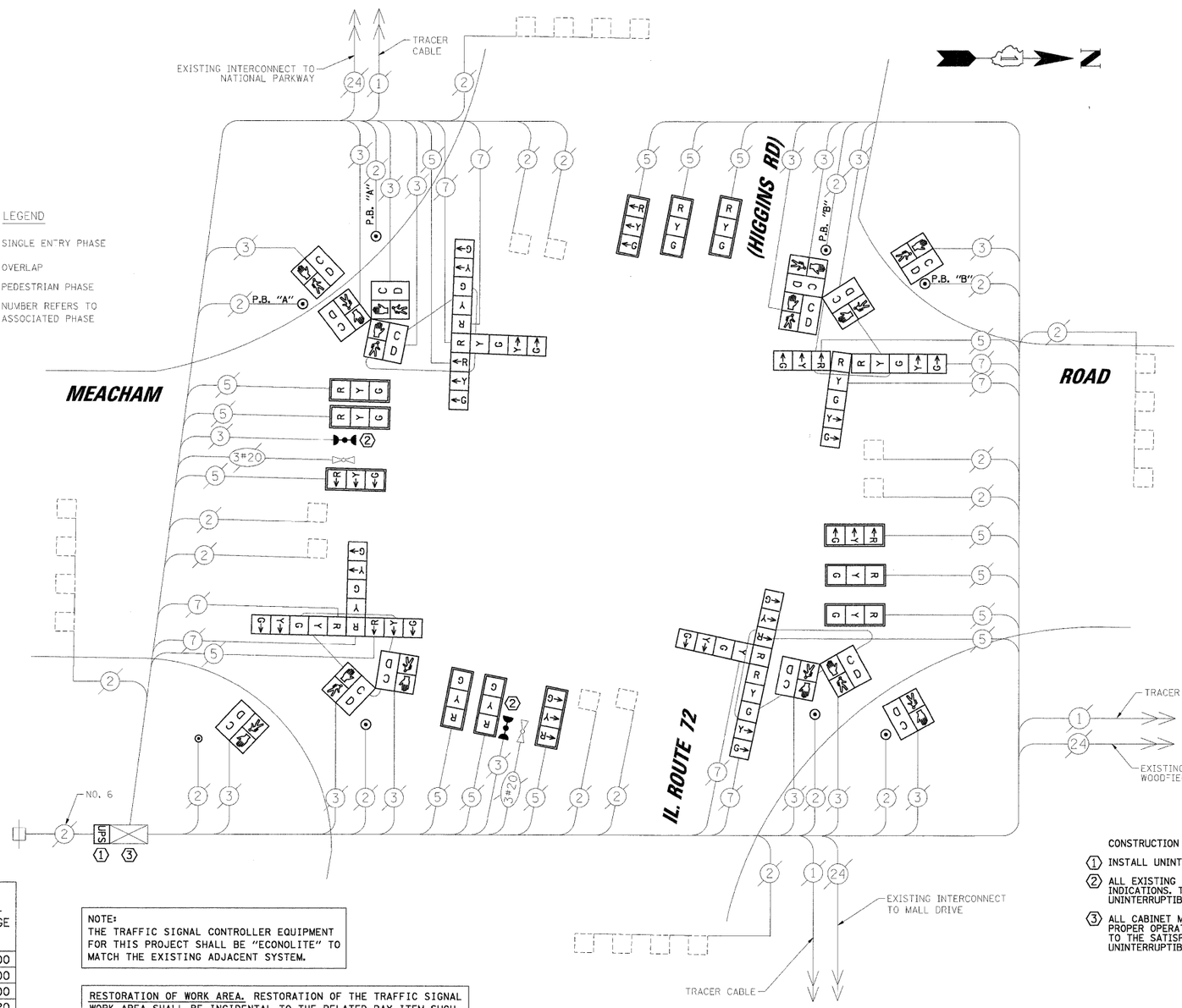

CABLE PLAN LEGEND

EXISTING	PROPOSED	
G	G	8" (200mm) TRAFFIC SIGNAL SECTION
R	R	12" (300mm) TRAFFIC SIGNAL SECTION
W	W	12" (300mm) PEDESTRIAN SIGNAL SECTION
	C D	12" (300mm) PEDESTRIAN SIGNAL SECTION WITH COUNTDOWN TIMER
		CONTROLLER CABINET
		SERVICE INSTALLATION
T	T	TELEPHONE INSTALLATION
		VEHICLE DETECTOR, INDUCTION LOOP
		MAGNETIC DETECTOR
		EMERGENCY VEHICLE LIGHT DETECTOR
		CONFIRMATION BEACON
		PUSHBUTTON DETECTOR
2	2	DENOTES NUMBER OF CONDUCTORS. ALL CABLE NO. 14 EXCEPT AS INDICATED. ALL LOOP DETECTOR CABLE TO BE SHIELDED.
1	1	GROUND CABLE IN CONDUIT NO. 6 SOLID COPPER (GREEN)
24	24	FIBER OPTIC CABLE IN CONDUIT NO. 62.5/125 2-MM12F SM12F
R Y G Y G "P"	R Y G Y G "P"	SIGNAL FACE WITH BACKPLATE "P" INDICATES PROGRAMMED HEAD.
	R	RAILROAD CONTROL CABINET
"E"		ILLUMINATED SIGN "NO LEFT TURN"
"E"		ILLUMINATED SIGN "NO RIGHT TURN"
H/C C		GROUND ROD AT HANDHOLE (H), DOUBLE HANDHOLE (H), OR CONTROLLER (C)
P P		GROUND ROD AT POST (P) OR MAST ARM POLE (MA)
S S		GROUND ROD AT ELECTRIC SERVICE INSTALLATION
	UPS	UNINTERRUPTIBLE POWER SUPPLY

CONSTRUCTION NOTES:

1. INSTALL UNINTERRUPTIBLE POWER SUPPLY (UPS).
2. ALL EXISTING CONFIRMATION BEACONS SHALL BE RETROFITTED WITH LED INDICATIONS. THIS WORK SHALL BE INCIDENTAL TO THE PAY ITEM: UNINTERRUPTIBLE POWER SUPPLY.
3. ALL CABINET MODIFICATIONS AND/OR LOAD SWITCH REPLACEMENTS REQUIRED FOR PROPER OPERATION OF THE LED SIGNAL AND LED CONFIRMATION BEACON INDICATIONS TO THE SATISFACTION OF THE ENGINEER SHALL BE INCIDENTAL TO THE PAY ITEM: UNINTERRUPTIBLE POWER SUPPLY.

NOTE:
THE TRAFFIC SIGNAL CONTROLLER EQUIPMENT FOR THIS PROJECT SHALL BE "ECONOLITE" TO MATCH THE EXISTING ADJACENT SYSTEM.

RESTORATION OF WORK AREA. RESTORATION OF THE TRAFFIC SIGNAL WORK AREA SHALL BE INCIDENTAL TO THE RELATED PAY ITEM SUCH AS FOUNDATION, CONDUIT, HANDHOLE, TRENCH AND BACKFILL, ETC., AND NO EXTRA COMPENSATION SHALL BE ALLOWED. ALL ROADWAY SURFACES SUCH AS SHOULDERS, MEDIANS, SIDEWALKS, PAVEMENT, ETC. SHALL BE REPLACED IN KIND. ALL DAMAGE TO MOWED LAWNS SHALL BE REPLACED WITH AN APPROVED SOD, AND ALL DAMAGE TO UNMOWED FIELDS SHALL BE SEEDED IN ACCORDANCE WITH STANDARD SPECIFICATIONS 252 AND 250 RESPECTIVELY.

NOTE:
PUSHBUTTON "A" SHALL PLACE A CALL IN PHASES 2 AND 4.
PUSHBUTTON "B" SHALL PLACE A CALL IN PHASES 4 AND 6.

I.D.O.T.
TRAFFIC SIGNAL INSTALLATION
ELECTRICAL SERVICE REQUIREMENTS

TYPE	NO. OF LAMPS	WATTAGE X INCAND.	WATTAGE LED	X % OPERATION	TOTAL WATTAGE
SIGNAL (RED)	24		17	0.50	204.00
(YELLOW)	24		25	0.25	150.00
(GREEN)	24		15	0.25	90.00
ARROW	16		12	0.10	19.20
PED. SIGNAL	14		25	1.00	350.00
CONTROLLER	1		100	1.00	100.00
ILLUM. SIGN	-	252	25	0.05	-
VIDEO SYSTEM	-	150	-	1.00	-
FLASHER				0.50	
ENERGY COSTS TO:				TOTAL =	913.20

ILLINOIS DEPARTMENT OF TRANSPORTATION
DIVISION OF HIGHWAY/DISTRICT 1
201 WEST CENTER COURT/SCHAUMBURG, ILLINOIS 60196-1096

ENERGY SUPPLY: CONTACT: MARK GLOECK
PHONE: (630) 691-4529
COMPANY: COMED

FOUNDATION (DEPTH)	FT.	(m)	CABLE SLACK	FT.	(m)	VERTICAL	FT.	(m)
TYPE A - POST	4	(1.2)	HANDHOLE	6.5	(2.0)	ALL FOUNDATIONS	3.5	(1.0)
C - CONTROLLER W/ UPS	4	(1.2)	DOUBLE HANDHOLE	13	(4.0)	MAST ARM (L) POLE	20'+L-2=	
D - CONTROLLER	4	(1.2)	SIGNAL POST	2	(1.0)		(6m+L-0.6m)=	
E - M. ARM POLE			CONTROLLER CAB.	1	(0.5)	BRACKET MOUNTED	13	(4.0)
30" (750mm)	15	(4.6)	FIBER OPTIC	13	(4.0)	PED. PUSHBUTTON	6	(1.8)
36" (900mm)	15	(4.6)	ELECTRIC SERVICE	1	(0.5)	ELECTRIC SERVICE	13.5	(4.1)
42" (1050mm)	25	(7.6)	GROUND CABLE	1	(0.5)	SERVICE TO GROUND	13.5	(4.1)
						POST MOUNTED	6	(1.8)

SCHEDULE OF QUANTITIES

ITEM	UNIT	TOTAL
SIGN PANEL - TYPE 1	SQ FT	40
MAINTENANCE OF EXISTING TRAFFIC SIGNAL INSTALLATION	EACH	1
SIGNAL HEAD, LED, 1-FACE, 3-SECTION, MAST-ARM MOUNTED	EACH	12
SIGNAL HEAD, LED, 3-FACE, 1-3 SECTION, 2-5 SECTION BRACKET MOUNTED	EACH	4
PEDESTRIAN SIGNAL HEAD, LED, 1-FACE, BRACKET MOUNTED WITH COUNTDOWN TIMER	EACH	4
PEDESTRIAN SIGNAL HEAD, LED, 2-FACE, BRACKET MOUNTED WITH COUNTDOWN TIMER	EACH	2
PEDESTRIAN SIGNAL HEAD, LED, 3-FACE, BRACKET MOUNTED WITH COUNTDOWN TIMER	EACH	2
TRAFFIC SIGNAL BACKPLATE, LOUVERED, ALUMINUM	EACH	12
PEDESTRIAN PUSH-BUTTON	EACH	8
REMOVE EXISTING TRAFFIC SIGNAL EQUIPMENT	EACH	1
UNINTERRUPTIBLE POWER SUPPLY	EACH	1

CHRISTOPHER B. BURKE ENGINEERING LTD.
9575 West Higgins Road, Suite 600
Rosemont, Illinois 60018
(847) 823-0500

PLAN: SURVEYED / PLOTTED / ALIGNMENT CHECKED / R.O.W. CHECKED / CADD FILE NAME / NOTE BOOK / NO.

PROFILE: SURVEYED / PLOTTED / GRADES CHECKED / STRUCTURE NOTATNS CHKD / NOTE BOOK / NO.

N:\Jobs\2080240\Task 5-EE Northwest Cook Safety\Task 02 - IL72 @ Meacham\CAB_IL72 @ Meacham.dgn

FILE NAME = ...\CAB_IL72 @ Meacham.dgn	USER NAME = FPACIONE	DESIGNED - ABR	REVISED -
		DRAWN - FPB / FCP	REVISED -
	PLOT SCALE = N.T.S.	CHECKED - MJT	REVISED -
	PLOT DATE = 1/26/2009	DATE -	REVISED -

STATE OF ILLINOIS
DEPARTMENT OF TRANSPORTATION

SCHEDULE OF QUANTITIES, CABLE PLAN, PHASE DESIGNATION DIAGRAM AND EMERGENCY VEHICLE PREEMPTION SEQUENCE
IL. ROUTE 72 (HIGGINS ROAD) AND MEACHAM ROAD

SCALE: N.T.S. | SHEET NO. OF SHEETS | STA. TO STA.

F.A.P. RTE.	SECTION	COUNTY	TOTAL SHEETS	SHEET NO.
VAR	2009-008-TS	COOK	41	21
		CONTRACT NO. 60G04		

FED. ROAD DIST. NO. | ILLINOIS | FED. AID PROJECT