PAVT MARKING LEGEND

A-PREFORMED PLASTIC PAVT MK TYPE B - LINE 6"
B-URETHANE PAVT MK - LINE 4"
C-URETHANE PAVT MK - LINE 8"
D-URETHANE PAVT MK - LINE 12"
E-RAISED REFLECTIVE PAVT MKR

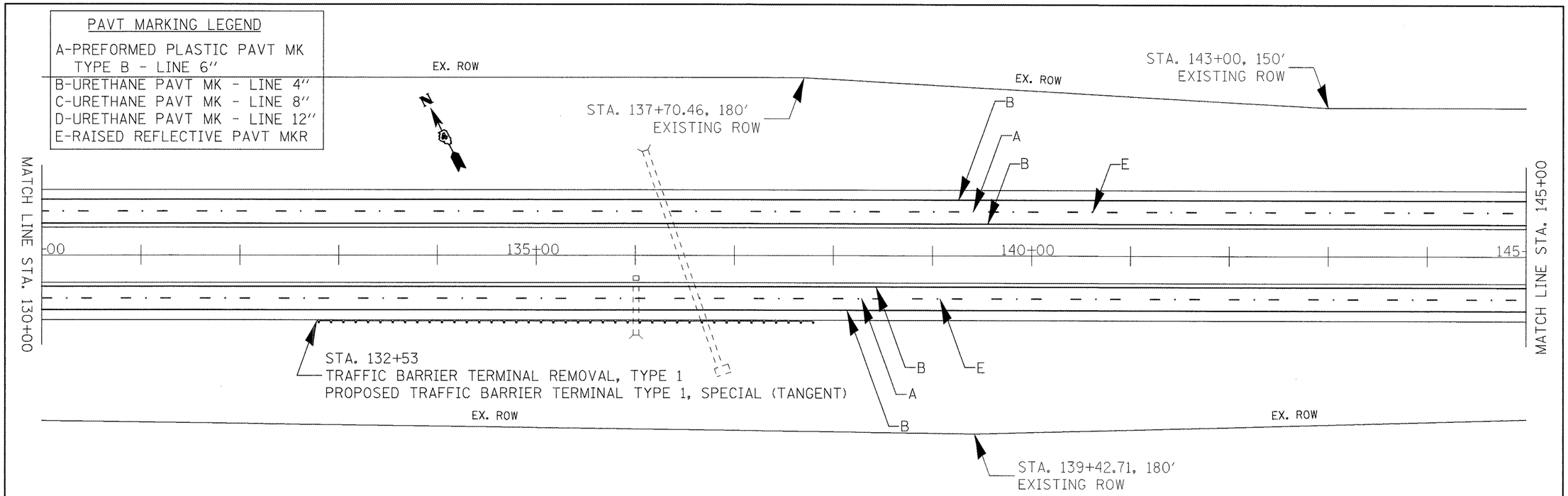

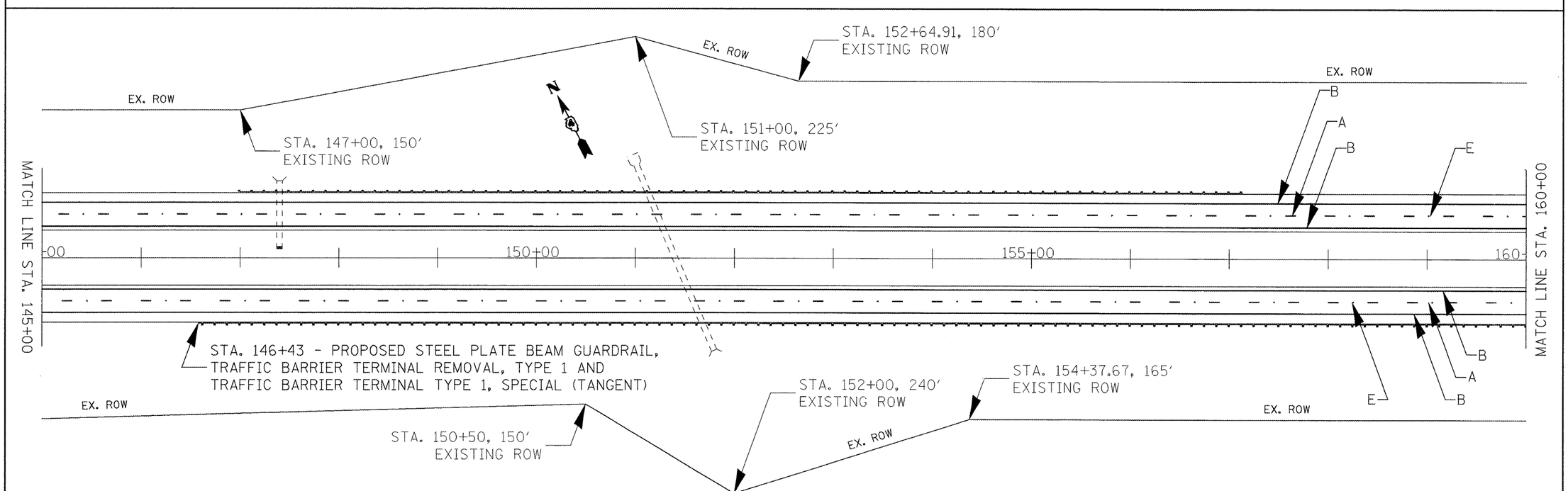

FILE NAME = Plan Sheets.dgn	USER NAME = toroja	DESIGNED -	REVISED -	STATE OF ILLINOIS DEPARTMENT OF TRANSPORTATION	PLAN SHEETS	F.A.I. RTE.	SECTION	COUNTY	TOTAL SHEETS / SHEET NO.
		DRAWN -	REVISED -			74	72(5RS-2,5B-1;6RS-1)	PEORIA	59 / 32
	PLOT SCALE = 100.0000 ' / IN.	CHECKED -	REVISED -					CONTRACT NO. 68391	
	PLOT DATE = 2/13/2009	DATE -	REVISED -		SCALE: 1" = 50' / SHEET NO. 5 OF 14 SHEETS / STA. 130+00 TO STA. 160+00			ILLINOIS FED. AID PROJECT	