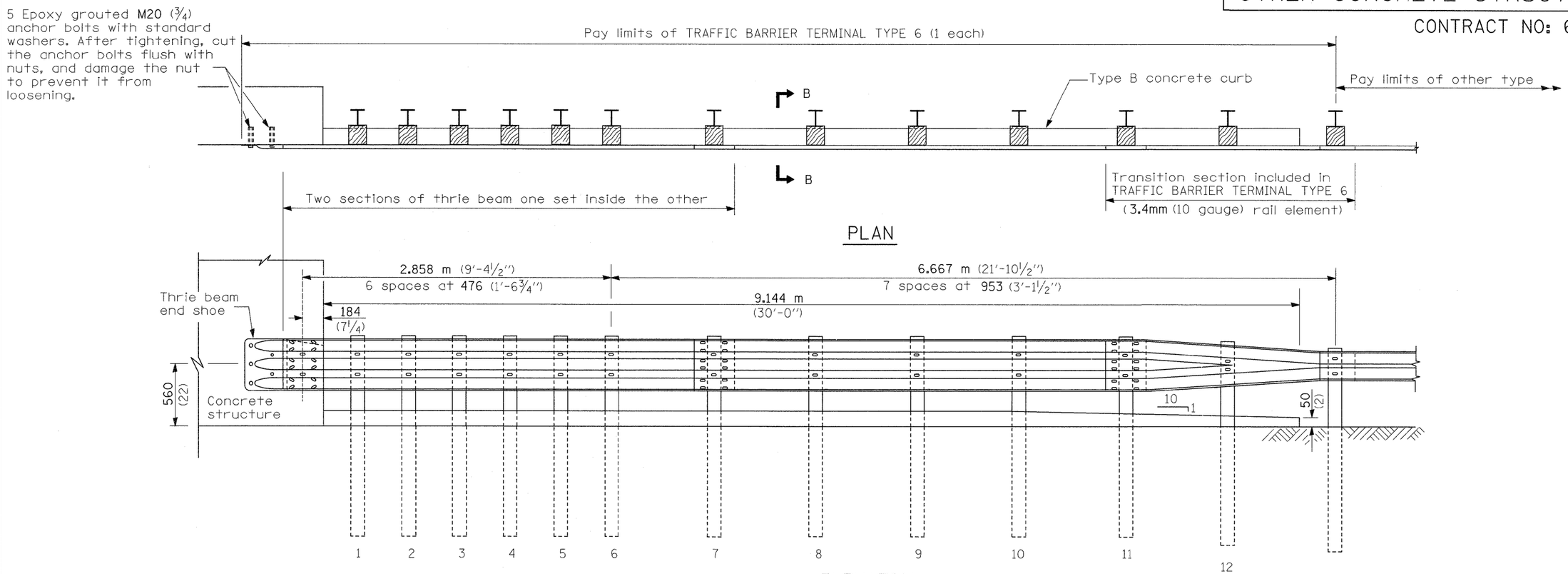

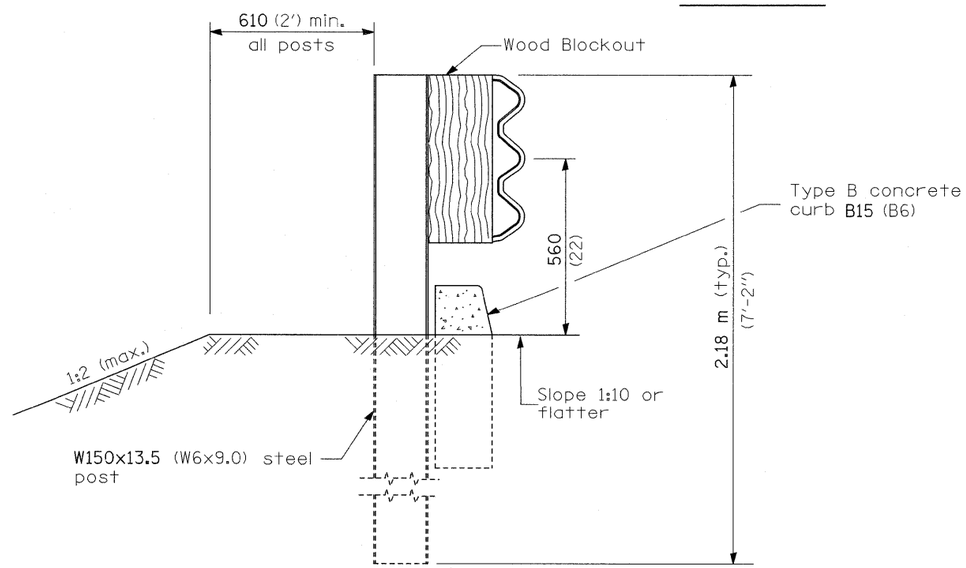

SECTION B-B

TRAFFIC BARRIER TERMINAL, TYPE 6 (SPECIAL)

Sheet 2 of 3