F.A.P. RTE.	SECTION	COUNTY	TOTAL SHEETS	SHEET NO.
320	*	MACON	51	45

* (126X)RS-1&135[(R)RS&(BR-1)BR]
CONTRACT NO. 90926

SHEET 8 OF 10

SECTION THROUGH ABUTMENTS

(at right ∠'s)

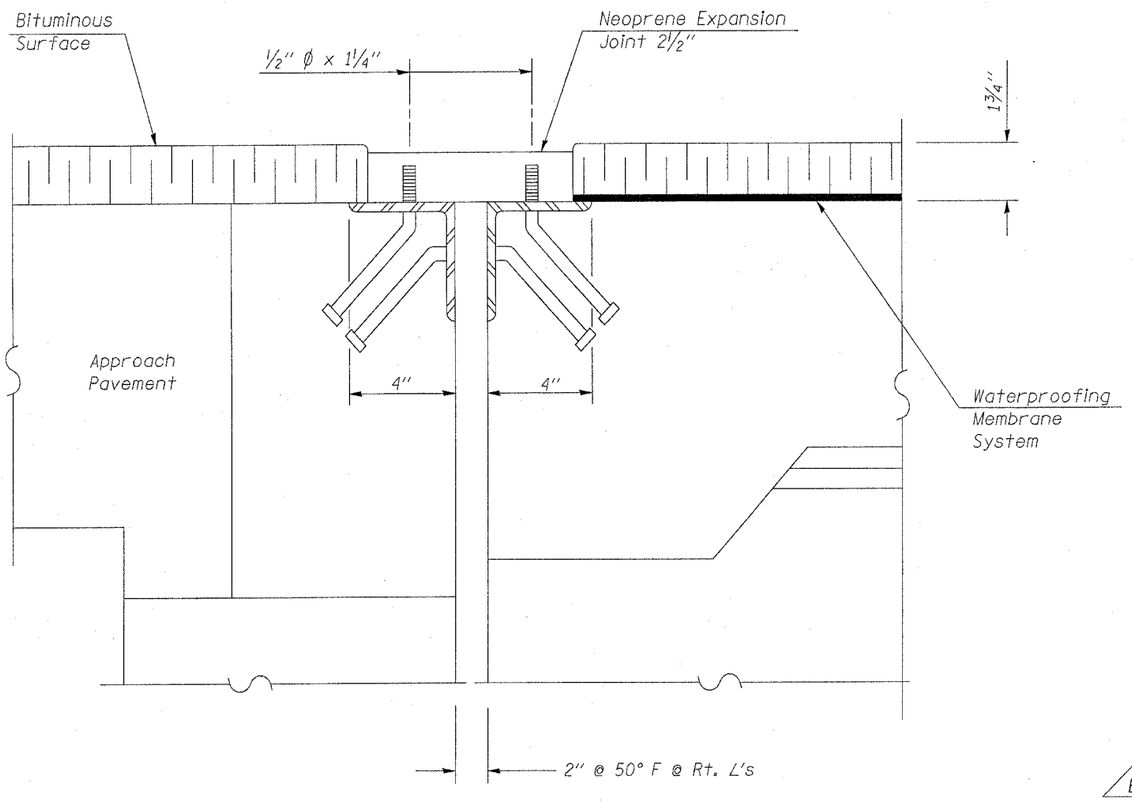

EXISTING

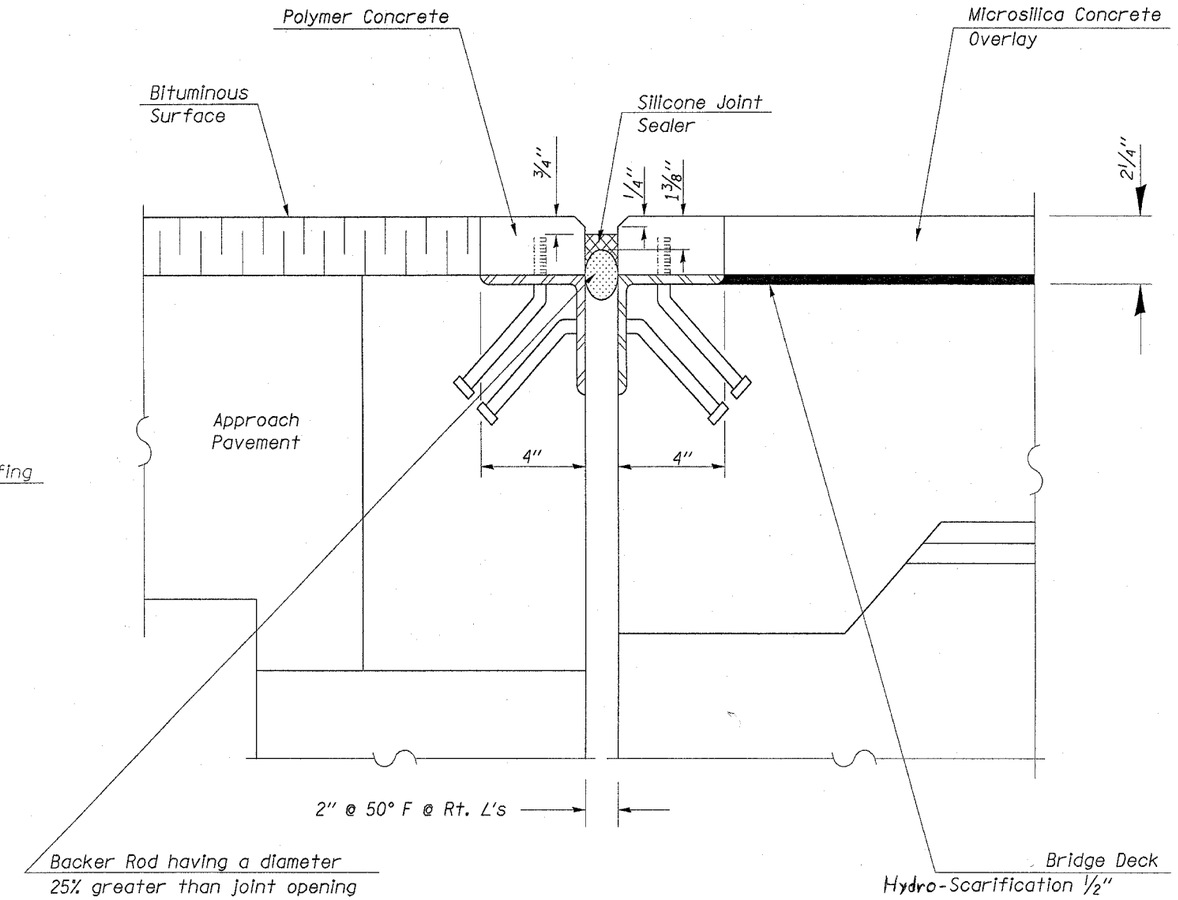

PROPOSED