F.A.U. RTE.	SECTION	COUNTY	TOTAL SHEETS	SHEET NO.
6108	(70X)N & TS-1	LA SALLE	460	346
STA.		TO STA.		
FED. ROAD DIST. NO.	ILLINOIS	FED. AID PROJECT		

CONTRACT NO. 86603

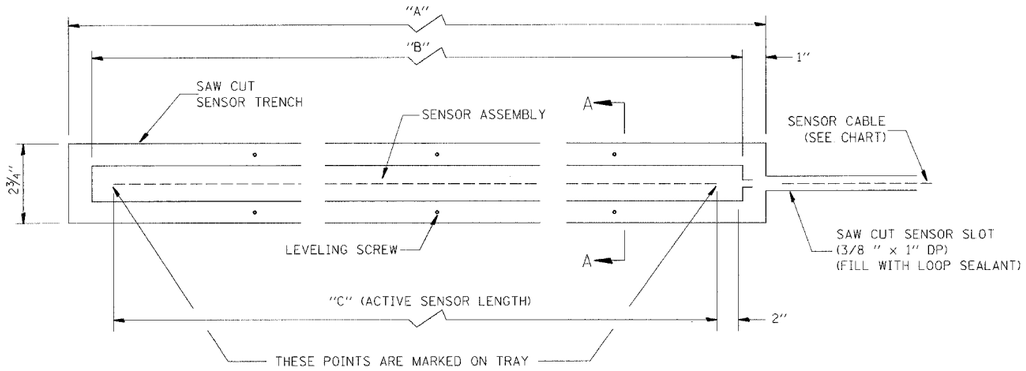

PLAN VIEW

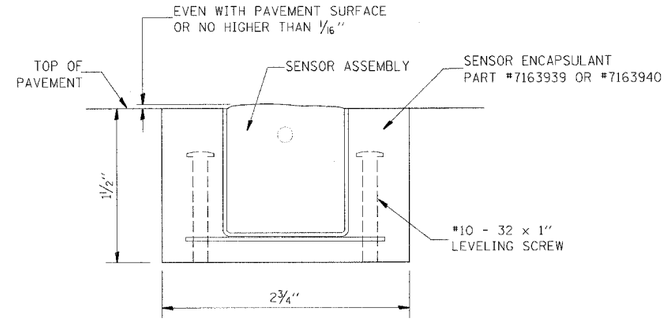

SEC. A - A

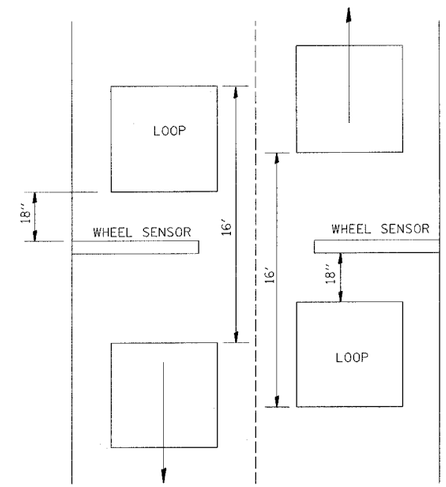

TYPICAL INSTALLATION
FOR CLASSIFICATION

GENERAL NOTE:
THIS WORK SHALL CONSIST OF THE REMOVAL AND REPLACEMENT OF DETECTOR LOOPS AND AXLE DETECTORS (PIEZOCABLE SENSOR).
THE DETECTOR LOOPS AND AXLE DETECTORS SHALL BE REMOVED WITH THEIR ELECTRIC CABLE ALL THE WAY TO THE EXISTING CABINET CONNECTION, AND REPLACED IN THE SAME MANNER USING THE EXISTING CONDUIT, HANDHOLE, AND GULFBOX JUNCTION.

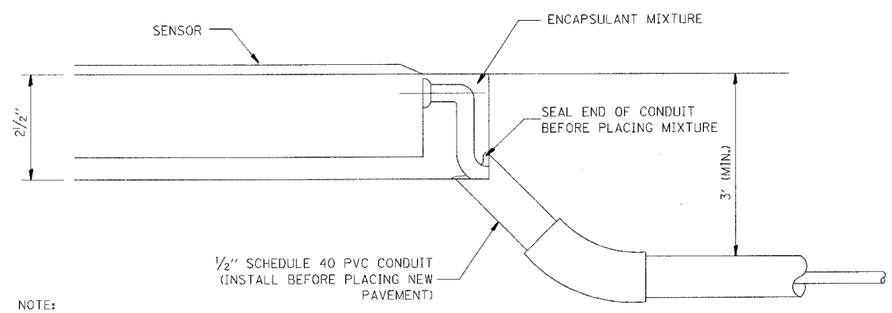

NOTE:
THIS ARRANGEMENT CAN BE USED ONLY WITH NEW PAVEMENT CONSTRUCTION.

ALTERNATE SENSOR CABLE INSTALLATION

SENSOR ASSEMBLY INSTALLATION PROCEDURE:

1. USING A CHALK LINE, MARK THE SENSOR TRENCH OUTLINE ON THE PAVEMENT. SEE SYSTEM LAYOUT DRAWING FOR SENSOR LOCATIONS.
2. SAW CUT AROUND THE TRENCH PERIMETER TO A DEPTH OF 1 1/2".
3. SAW CUT THE 3/8" X 1" DP. SENSOR CABLE SLOT TO THE EDGE OF THE PAVEMENT.
4. REMOVE EXISTING PAVEMENT TO A DEPTH OF 1 1/2" WITHIN THE SAW CUT TRENCH PERIMETER.
5. THOROUGHLY CLEAN THE TRENCH OF ALL DEBRIS, DUST, ETC.
6. PLACE SENSOR ASSEMBLY IN THE TRENCH. ADJUST THE #10-32 LEVELING SCREWS UNTIL THE TOP OF THE SENSOR ASSEMBLY IS EVEN WITH THE PAVEMENT SURFACE. (NO HIGHER THAN 1/16").
7. THOROUGHLY MIX LARGE CAN OF ENCAPSULANT.
8. ADD HARDENER & MIX THOROUGHLY.
9. POUR ENCAPSULANT AROUND SENSOR TRYING NOT TO DISTURB SENSOR.
10. 3 TO 5 POUND WEIGHT MAY HAVE TO BE USED TO STOP FLOATING.
11. FILL TRENCH WITH MIXTURE UNTIL FLUSH WITH THE SURFACE OF PAVEMENT. TROWEL AS REQUIRED.
12. LET EPOXY CURE UNTIL HARD.
13. GRIND PERIMETERS IF NEEDED TO REMOVE HIGH OR ROUGH SPOTS.

NOTE: SENSOR CAN BE BENT SLIGHTLY TO CONFORM TO ROADWAY.

REFERENCE: INSTALLATION MANUAL #1050527

847-1

ILLINOIS DEPARTMENT OF TRANSPORTATION

DETAILS

FAU 6108 (IL. RTE. 351)
SECTION (70X)N & TS-1
LASALLE COUNTY

SCALE: VERT. HORIZ.
DATE: 06/06/03

DRAWN BY: MABUS
DESIGNED BY: BOTT
CHECKED BY: COLBROOK

GREENE & BRADFORD, INC. (OF SPRINGFIELD)
CIVIL ENGINEERS
900 CONSTITUTION DRIVE
SPRINGFIELD, ILLINOIS 62703
PROFESSIONAL & STRUCTURAL ENGINEERING CORPORATION
(217) 753-8227 (FILE) FAX: (217) 753-8227 (FILE) E-MAIL: - GGBR@THEMONDEM.COM

COMPUTER FILE NO. STANDARDS-16
PROJECT: 01194_B_N
03/03/04-RPB

REVISIONS	
NAME	DATE

DESIGN		
INT.	DATE	REASON

PLOTS & CHECKS			
INT.	DATE	NO.	REASON

CHECKS		
INT.	DATE	REASON

FILE NAME = $FILE$
PLOT SCALE = $pltscale$ DRV = $PLOTTER$
PLOT DATE = $DATE$
PLOT TIME = $TIME$
OPERATOR = $USER$