F.A.U. RTE.	SECTION	COUNTY	TOTAL SHEETS	SHEET NO.
6108	(70X)N & TS-1	LA SALLE	460	340
STA.	TO STA.			
FED. ROAD DIST. NO.	ILLINOIS	FED. AID PROJECT		

CONTRACT NO. 86603

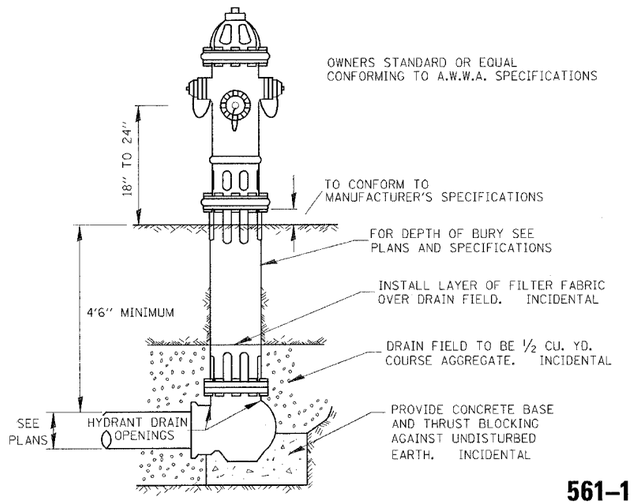

NOTE:
CONCRETE BASE AND BLOCKING
MATERIAL SHALL NOT BLOCK
NOR OBSTRUCT HYDRANT DRAIN.

561–1

TYPICAL
HYDRANT
INSTALLATION

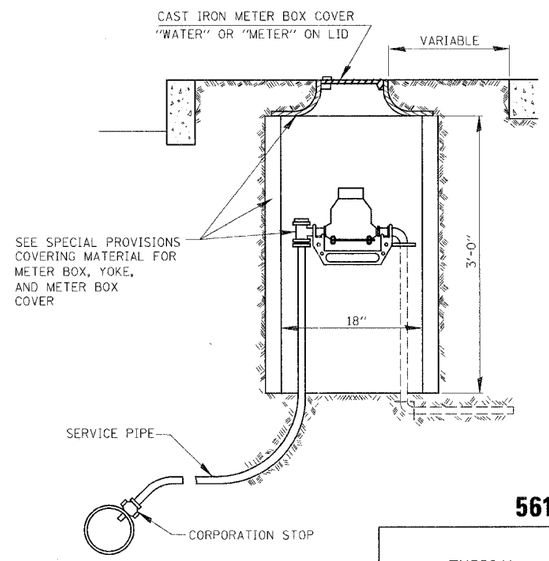

561–2

TYPICAL
SINGLE METER
BOX INSTALLATION

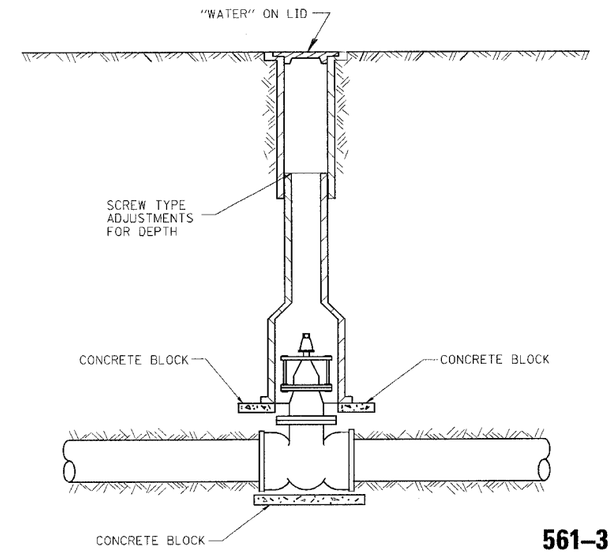

561–3

TYPICAL
VALVE BOX
INSTALLATION

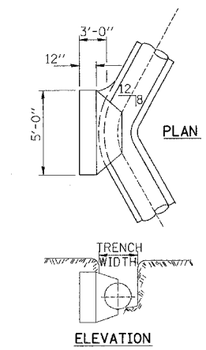

BEND BLOCKING
11°4'

561–6

WATERMAIN INSTALLATION REQUIREMENTS

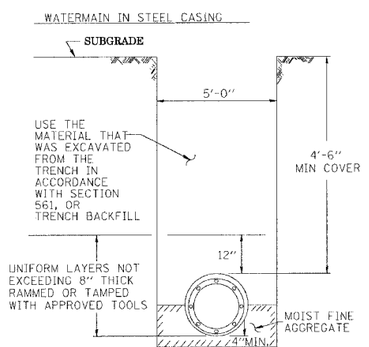

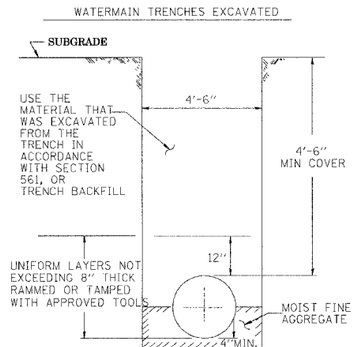

GENERAL NOTES:

1. ANY SOFT OR SPONGY MATERIAL ENCOUNTERED BELOW THE ELEVATION OF THE PIPE SHALL BE REMOVED AND REPLACED WITH WELL COMPACTED MOIST FINE AGGREGATE.
2. ANY ROCK ENCOUNTERED IN THE TRENCH SHALL BE REMOVED TO A DEPTH OF AT LEAST 8 INCHES BELOW THE PIPE GRADE AND REPLACED WITH WELL COMPACTED MOIST FINE AGGREGATE.
3. THE SIDES OF THE TRENCH MAY BE SLOPED OR BENCHED ABOVE A 5 FT TRENCH DEPTH OR ABOVE THE ELEVATION OF THE TOP OF PIPE, WHICHEVER IS GREATER, IN LIEU OF COMPLETE SHORING OR SHEETING OF THE FULL TRENCH DEPTH.

BACKFILL OPTIONS:

METHOD 1: UNIFORM LAYERS NOT EXCEEDING 12" THICK RAMMED OR TAMPED WITH APPROVED TOOLS
METHOD 2: UNIFORM LAYERS NOT EXCEEDING 12" THICK INUNDATED OR DEPOSITED IN WATER
METHOD 3: FILL TRENCH WITH LOOSE MATERIAL THEN JET WITH WATER, 6 FT MAXIMUM SPACING OF HOLES

561–4

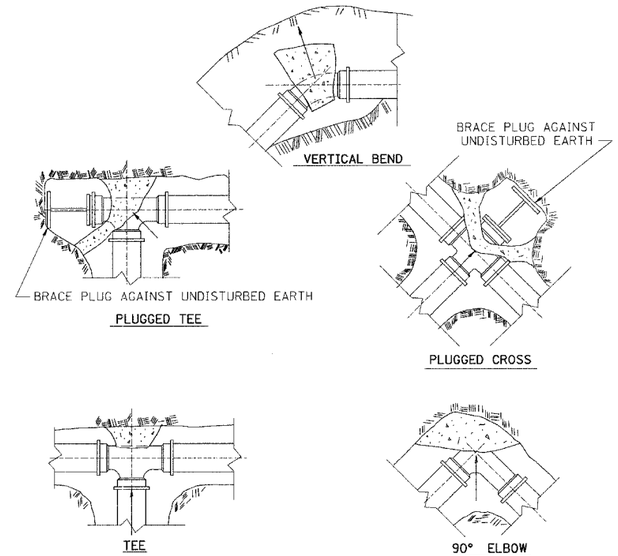

NOTES:

ALL BLOCKS BEAR AGAINST
UNDISTURBED EARTH
ALL BLOCKING SHALL BE 3000 P.S.I.
POURED CONCRETE.

ARROWS INDICATE DIRECTION OF
THRUST
ALL FITTINGS SHOWN IN PLAN
EXCEPT VERTICLE BEND

561–5

TYPICAL
THRUST BLOCK
INSTALLATIONS

DESIGN		
INT.	DATE	REASON

PLOTS & CHECKS			
INT.	DATE	NO.	REASON

FILE NAME = $FILE$
PLOT SCALE = $DHTSCALE$ DRV = $PLOTTER$
PLOT DATE = $DATE$
PLOT TIME = $TIME$
OPERATOR = $USER$

CHECKS		
INT.	DATE	REASON

REVISIONS	
NAME	DATE

ILLINOIS DEPARTMENT OF TRANSPORTATION

DETAILS

FAU 6108 (IL. RTE. 351)
SECTION (70X)N & TS-1
LASALLE COUNTY

SCALE: VERT.
HORIZ.
DATE: 06/06/03

DRAWN BY: MABUS
DESIGNED BY: BOTT
CHECKED BY: COLBROOK

GREENE & BRADFORD, INC.
OF SPRINGFIELD
CONSULTING ENGINEERS
300 CONSTITUTION DRIVE
SPRINGFIELD, ILLINOIS 62707
PROFESSIONAL DESIGN FIRM 184-000273
PROFESSIONAL DESIGN FIRM CERTIFICATION
(217) 753-8414, (217) 753-8427 (FAX), E-MAIL - GBSP@GREENEBRADFORD.COM

COMPUTER FILE NO.
STANDARDS-08
PROJECT: 01194.B.N
03/03/04-RPB

IDOTPL-50 1"=50' 11/18/03

FAU RTE. 6108 (IL RTE. 351) LASALLE CO.