FAP ROUTE	SECTION	COUNTY	TOTAL SHEETS	SHEET NO
586	60R-2, 37R-1	MADISON	502	244

CONTRACT NO.: 76301

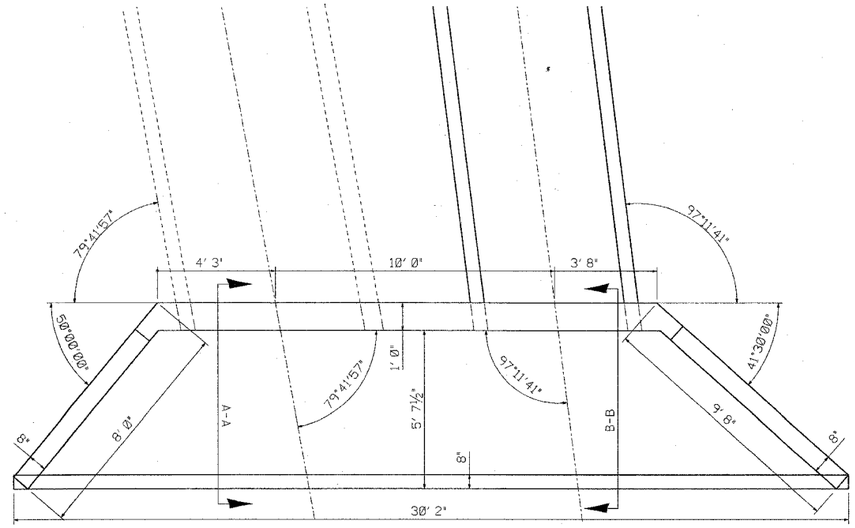

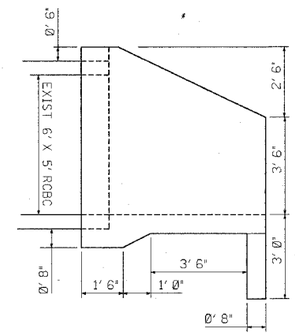

SECTION A-A

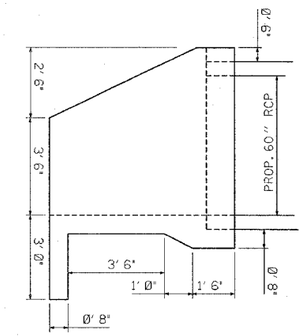

SECTION B-B

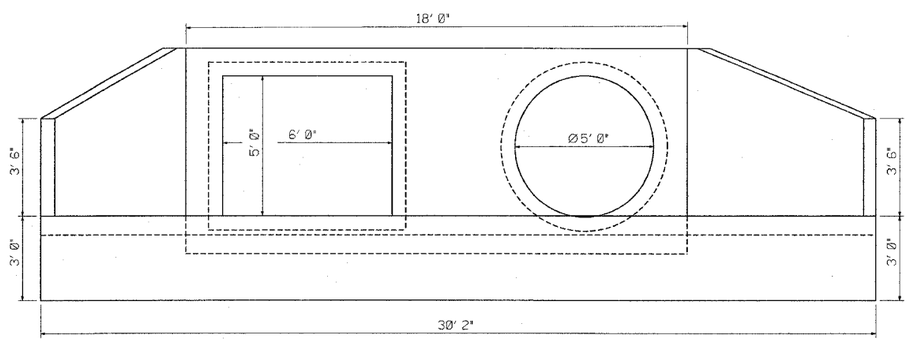

NOT TO SCALE

REVISIONS	
NAME	DATE

ILLINOIS DEPARTMENT OF TRANSPORTATION

BOX CULVERT
STA 100+48.24 (HWY 40)
DOWNSTREAM STRUCTURE
FAP ROUTE 586 (IL 162)
SECTION 60R-2, 37R-1
MADISON COUNTY

DRAWN BY:

PLOT DATE: Friday July 02, 2004 @ 10:13:31 AM

PLAN
NOTE BOOK NO.
SURVEYED
PLOTTED
ALIGNMENT CHECKED
RT. OF WAY CHECKED
CADD FILE NAME
BY
DATE

7/2/2004
Friday July 02, 2004 @ 10:13:31 AM
d:\projects\ad16999a\plan\pln048a.dgn LV=1-63