F.A.I. RTE.	SECTION	COUNTY	TOTAL SHEETS	SHEET NO.
57	*	**	76	68

STA. 558+57 TO STA. 559+04

FED. ROAD DIST. NO. _ ILLINOIS FED. AID PROJECT

CONTRACT NO. 70028

* (15,18-20)RS-2&(15-20)RS-2

** COLES & CUMBERLAND

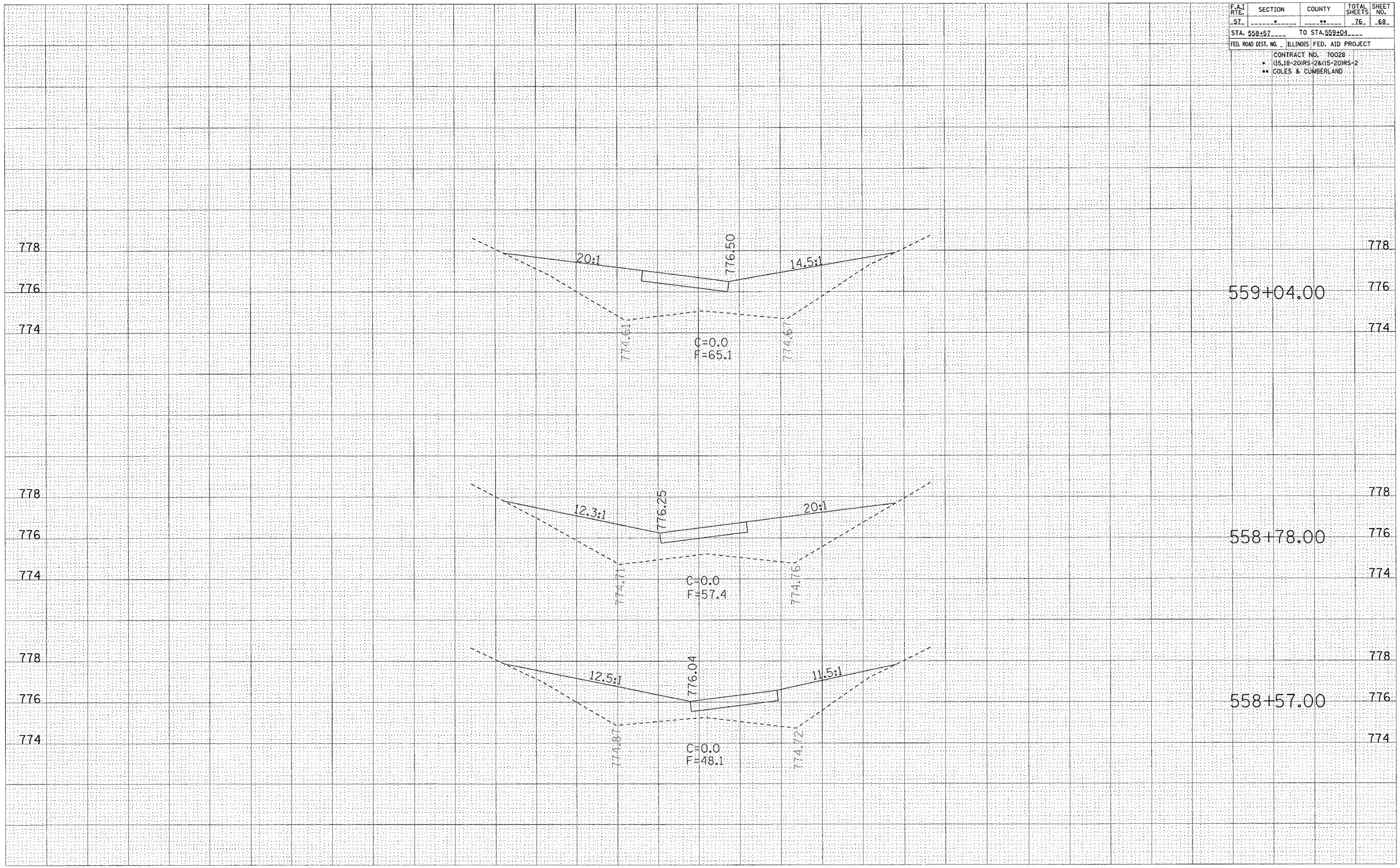

FINAL SURVEY	BY	DATE
SURVEYED		
PLOTTED		
TRAVERSE		
AREAS		
AREAS CHECKED		
NOTE BOOK NO.		

ORIGINAL SURVE	BY	DATE
SURVEYED		
PLOTTED		
TRAVERSE		
AREAS		
AREAS CHECKED		
NOTE BOOK NO.		