Notes: Pour steps monolithically with cap. Reinforcement bars designated (E) shall be epoxy coated.

Bars designated thus 10 x 3-#7 indicates 10 lines of #7 bars with 3 lengths per line.

STATE OF ILLINOIS
DEPARTMENT OF TRANSPORTATION

ROUTE NO.	SECTION	COUNTY	TOTAL SHEETS	SHEET NO.
F.A.P. 595	1-3-K	Rock Island	476	268
FED. ROAD DIST. NO. 7	ILLINOIS	FED. AID PROJECT-		

SHEET NO. 17
22 SHEETS

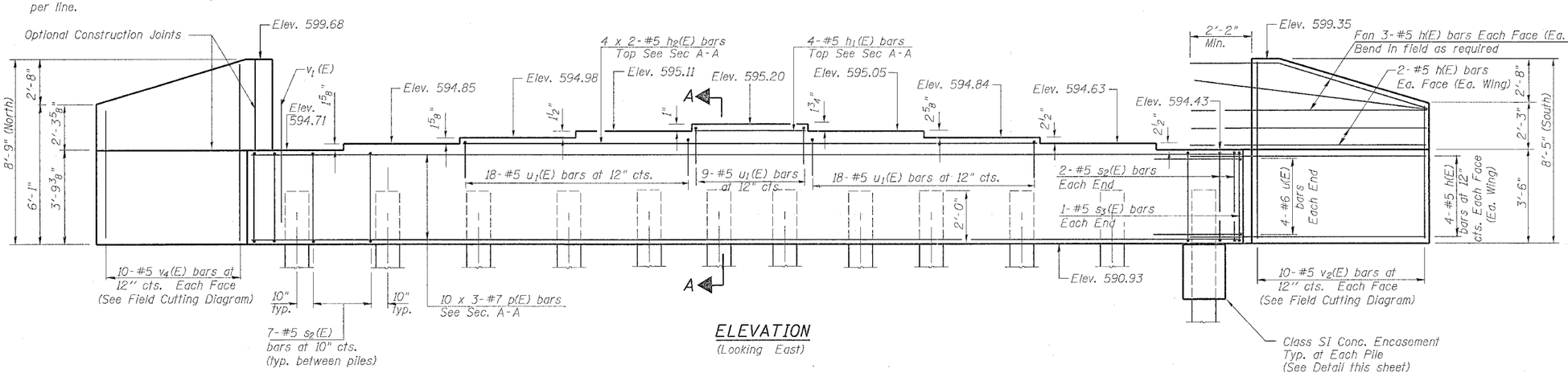

ELEVATION
(Looking East)

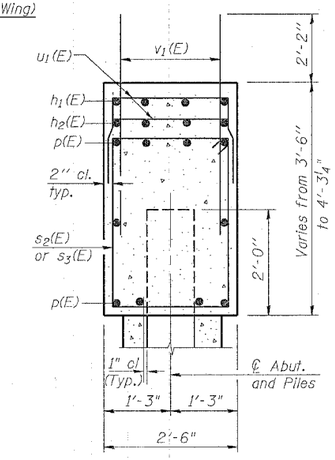

SECTION A-A

PILE DATA

Type: HP10 x 57
Capacity: Driven to Refusal
Est. Length: 51'-0"
No. Required: 11 + 1 Test Pile

Min. Bar Laps

#5 bar = 2'-2"
#7 bar = 3'-5"

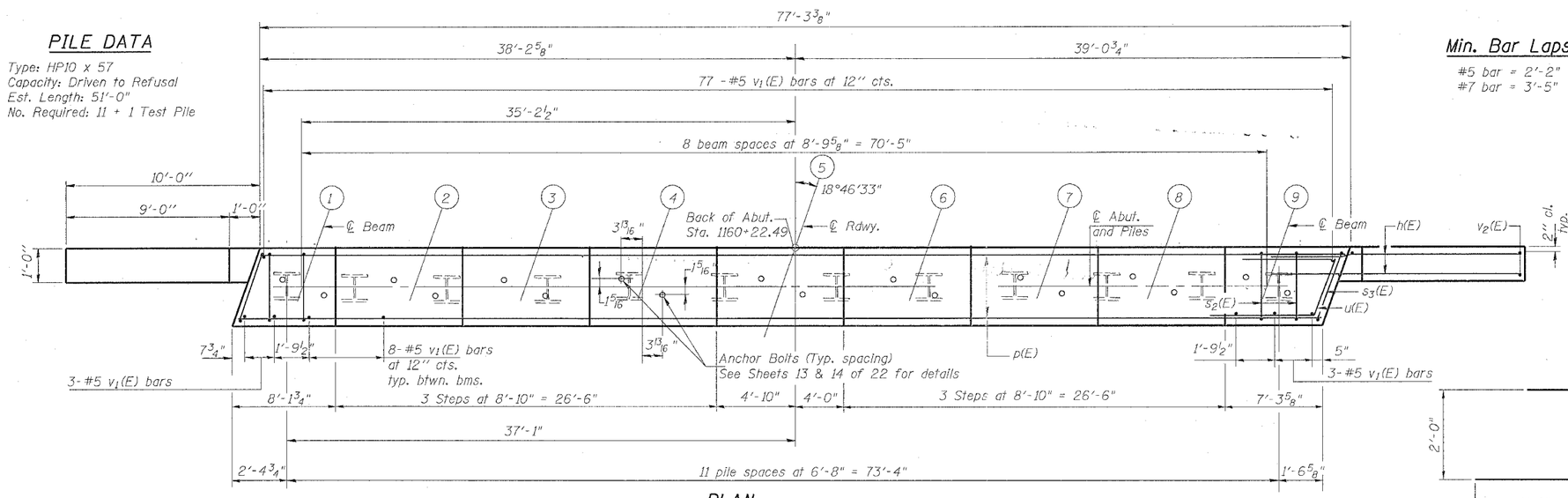

PLAN

BILL OF MATERIAL

Bar	No.	Size	Length	Shape
h(E)	36	#5	12'-7"	
h_1(E)	4	#5	8'-6"	
h_2(E)	8	#5	23'-0"	
p(E)	30	#7	28'-0"	
s_2(E)	81	#5	11'-7"	
s_3(E)	2	#5	11'-10"	
u(E)	8	#6	11'-1"	
u_1(E)	45	#5	5'-8"	
v_1(E)	147	#5	4'-4"	
v_2(E)	10	#5	13'-6"	
v_4(E)	10	#5	14'-2"	
Concrete Structures			Cu. Yd.	33.7
Reinforcement Bars, Epoxy Coated			Pound	4,780
Furnishing Steel Piles HP10x57			Foot	561
Driving Steel Piles			Foot	561
Test Pile Steel HP10x57			Each	1
Structure Excavation			Cu. Yd.	174
Metal Shoes			Each	11

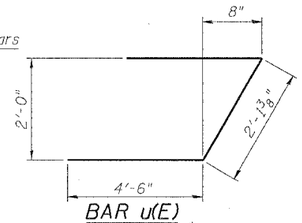

BAR u(E)

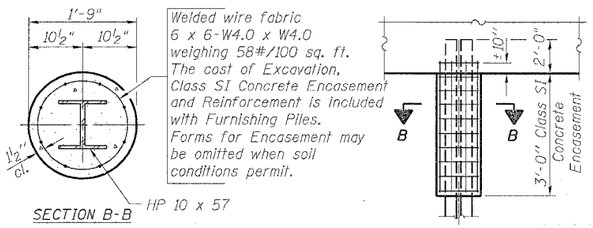

PILE ENCASEMENT DETAIL

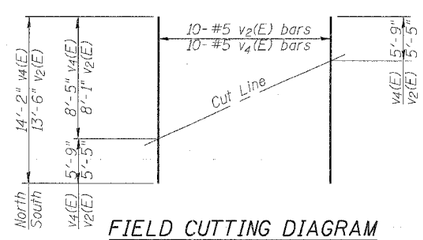

FIELD CUTTING DIAGRAM

Order v_2(E) & v_4(E) bars full length. Cut as shown and use remainder of bars in opposite face.

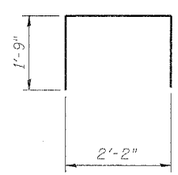

BARS u_1(E)

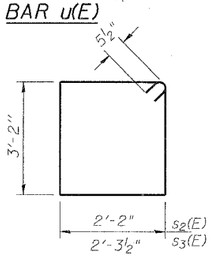

BARS s_2(E) & s_3(E)

EAST ABUTMENT DETAILS

52nd AVE. OVER MILAN BELTWAY
FAU ROUTE 5822 SECTION 1-3
ROCK ISLAND COUNTY
STATION 1159+12.92
STRUCTURE NO. 081-0156

DESIGNED	JBF
CHECKED	JBF
DRAWN	RAP
CHECKED	JBF

AI-R 9-01-03