ROUTE NO.	SECTION	COUNTY	TOTAL SHEETS	THIS SHEET
F.A.U. 6737	*	TAZEWELL	47	25
FED. ROAD DIST. NO. 7	ILLINOIS	PROJECT	M-5083-110	

*03-00089-02-PV
CONTRACT NO. 89349

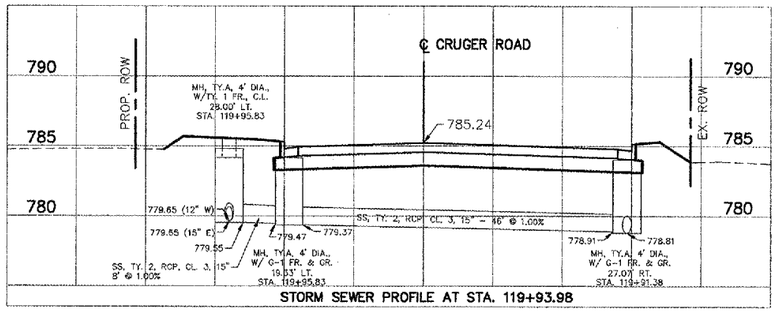

STORM SEWER PROFILE AT STA. 119+93.98

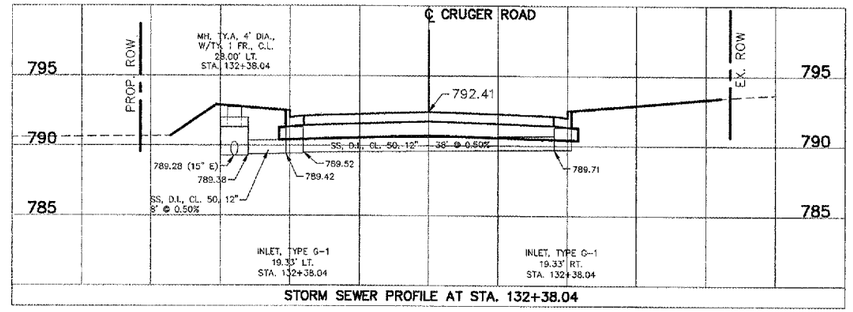

STORM SEWER PROFILE AT STA. 132+38.04

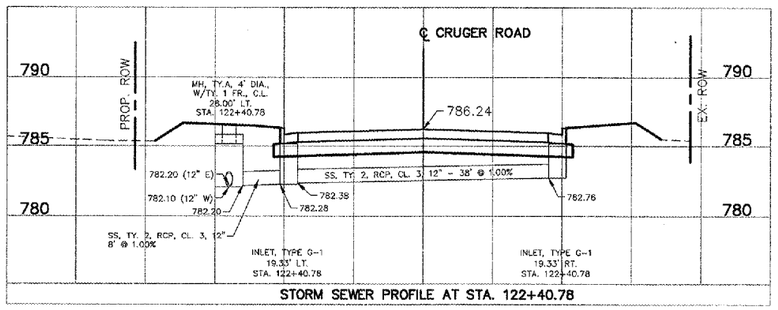

STORM SEWER PROFILE AT STA. 122+40.78

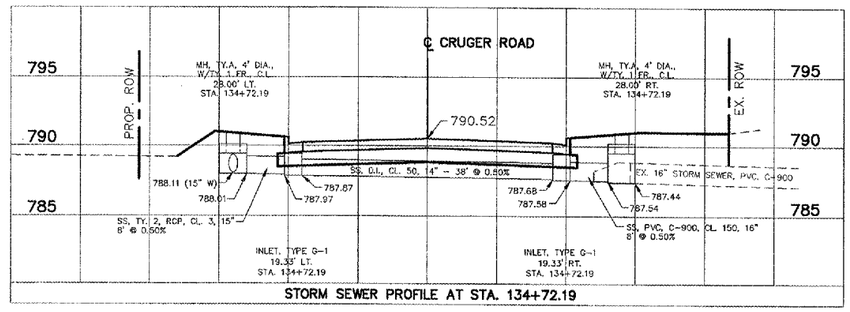

STORM SEWER PROFILE AT STA. 134+72.19

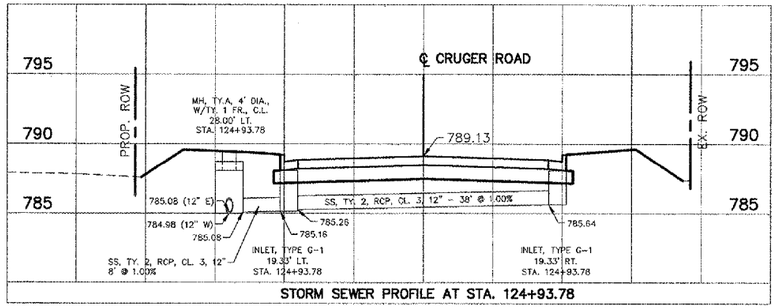

STORM SEWER PROFILE AT STA. 124+93.78

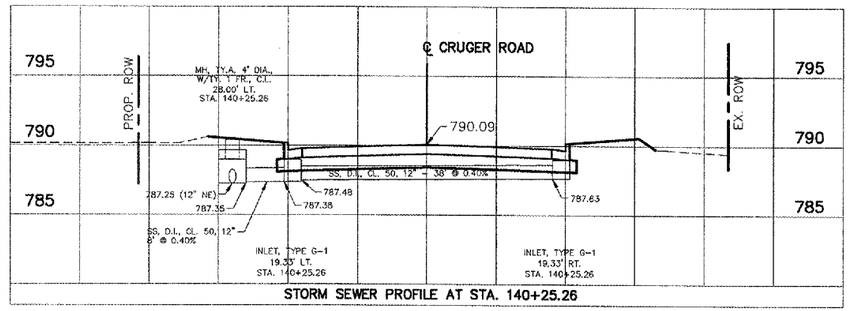

STORM SEWER PROFILE AT STA. 140+25.26

1" = 10' HOR
1" = 5' VER

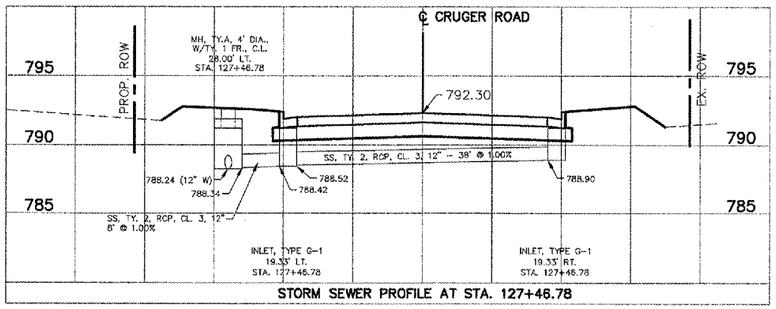

STORM SEWER PROFILE AT STA. 127+46.78

STORM SEWER PROFILES CRUGER ROAD, PHASE 3	AUSTIN ENGINEERING CO., INC. CIVIL ENGINEERS PEORIA LICENSE No. 184-001143 ILLINOIS		
FOR: CITY OF WASHINGTON	REVISED	REVISED	PROJECT NUMBER 20-05-004
DATE 12/16/05 SCALE 1" = 10' BOOK	REVISED	REVISED	SHEET NO. 25 OF 47