F.A. RTE.	SECTION	COUNTY	TOTAL SHEETS	SHEET NO.
----	----------	----------	----	64
STA. _____		TO STA._____		
FED. ROAD DIST. NO. _	ILLINOIS	FED. AID PROJECT		

89392

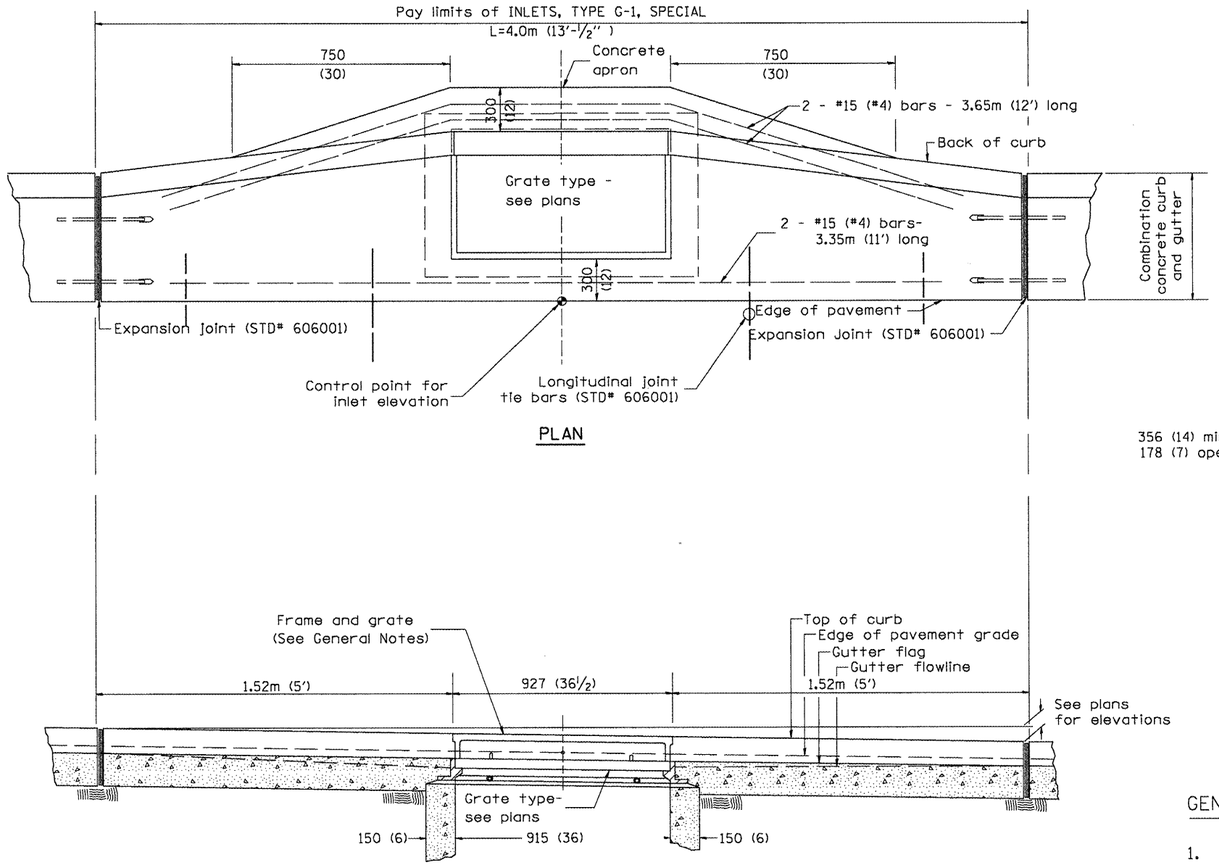

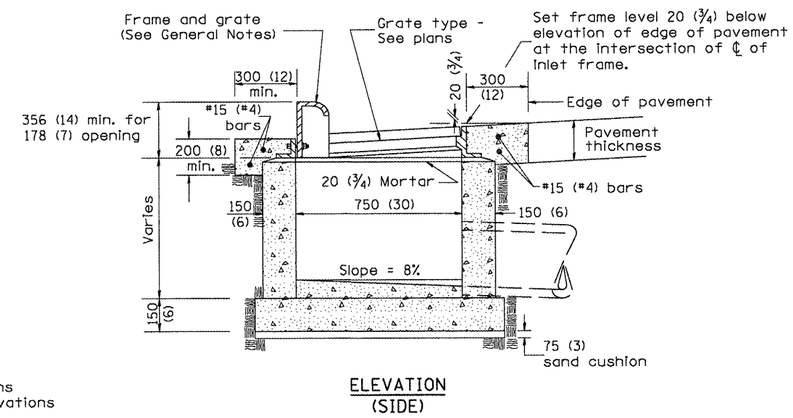

GENERAL NOTES

1. Inlet construction shall be in accordance with Section 602 of the Standard Specifications.
2. Combination Concrete Curb and Gutter shall be constructed in accordance with Section 606 of the Standard Specifications.
3. See District CADD Standard 604001-D4 for frame and grates.

All dimensions are in millimeters (inches) unless otherwise noted.

DATE	REVISIONS	BY
1-1-97	RENUM. B-4.02, NEW REVISION BOX	
12-1-98	CORRECT E. O. P. NOTE	J.A.
10-99	REVISION TO GENERAL NOTES	J.A.

ILLINOIS DEPARTMENT OF TRANSPORTATION

DISTRICT CADD STANDARD

INLETS, TYPE G-1, SPECIAL

CADD STANDARD 602006-D4

SCALE NOT TO SCALE — DRAWN BY CADD

DATE $$DATE$$ — CHECKED BY

602006-D4

3. Include District CADD Standard for frame and grates.
4. Include District Special Provision. Pay item includes transitional c.c.c &g., inlet and frame and grate. All work within pay limits.
5. Specify grate type in plans

$$DATE$$

DGN-ONLY