STATE OF ILLINOIS
DEPARTMENT OF TRANSPORTATION

ROUTE NO.	SECTION	COUNTY	TOTAL SHEETS	SHEET NO.
FAS 1536	125BR	Macon	45	16
FED. ROAD DIST. NO. 7		ILLINOIS	FED. AID PROJECT-	

SHEET NO. 4
29 SHEETS

Contract #74145

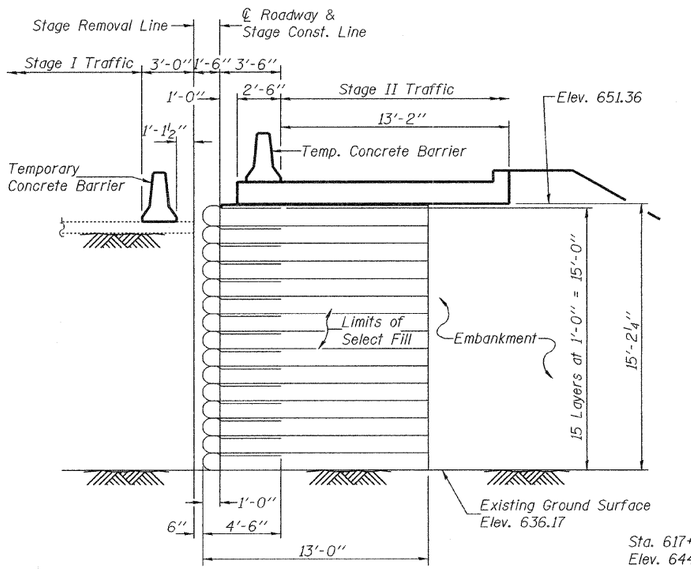

TYPICAL SECTION

Note:
The Contractor shall monitor the soil behind the existing East Abutment supporting the Stage I Approach Pavement and provide any necessary bracing to support the soil beneath the approach slab. Cost included with Geotextile Retaining Wall.

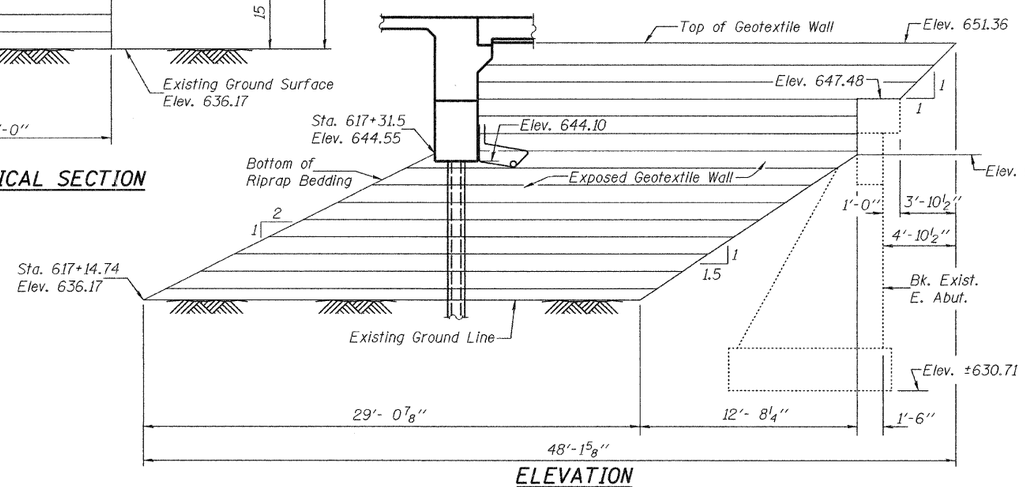

ELEVATION

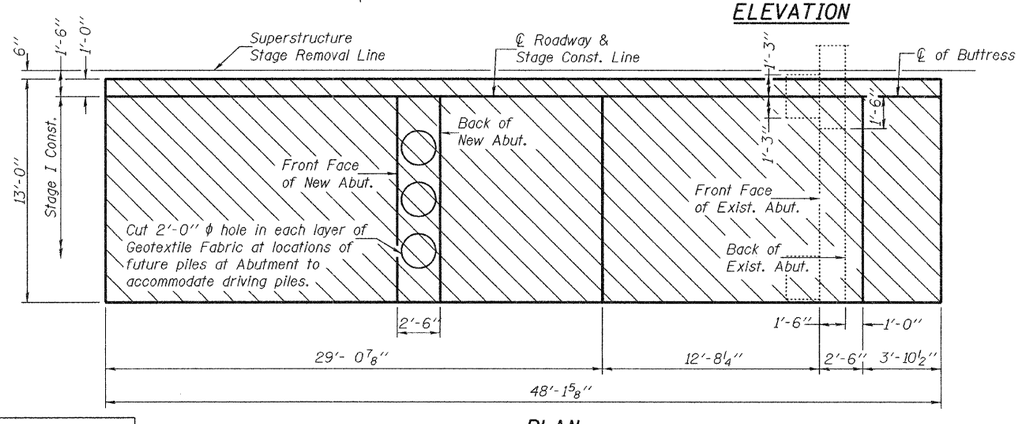

PLAN

Note:
Hatched area indicates limits of Geotextile Retaining Wall.

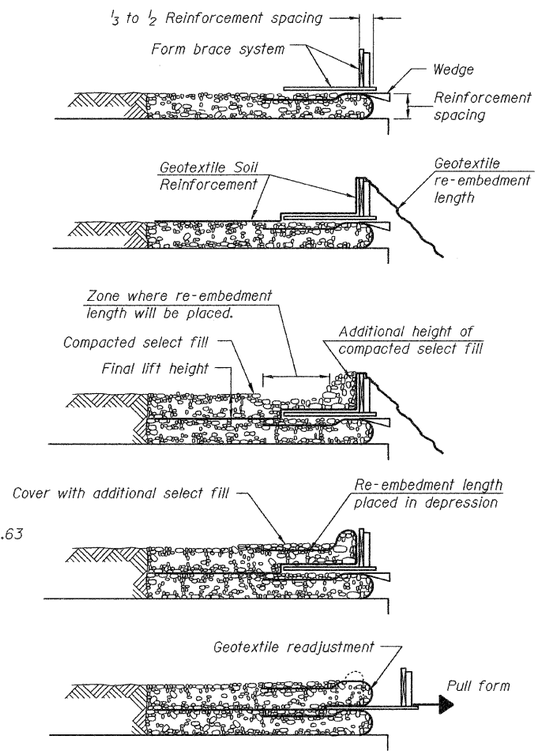

1. Place form brace system on completed reinforcement level; back from the finished fabric face a distance of ⅓ to ½ the geotextile reinforcement spacing.
2. Position fabric so that the required geotextile re-embedment length extends over the top of the form brace and the design reinforcement width is placed with no slack against the previous level.
3. Compact select fill material in lifts to final lift height, create (±3") depression in zone where re-embedment length will be located and place additional height of compacted select fill against form brace.
4. Fold geotextile re-embedment length back over form brace into zone where depression was made in select fill and place additional select fill (±3") to embed geotextile and bring to final lift height.
5. Pull form brace outward allowing geotextile face to slightly readjust to form tight round face level with plan reinforcement spacing.

TEMPORARY GEOTEXTILE WALL CONSTRUCTION SEQUENCE

The geotextile soil reinforcement shall have a minimum allowable tensile strength (T min.) of 58 lb./in. as determined by the procedure described in the Special Provision. The computations supporting the determination of (T min.) shall be submitted to the engineer for approval.

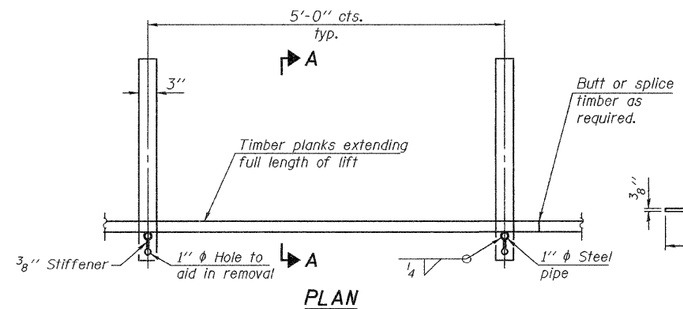

PLAN

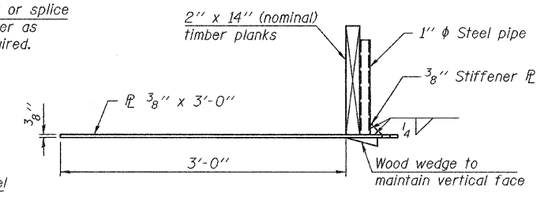

SECTION A-A

TEMPORARY GEOTEXTILE FORM BRACE DETAIL

This is a suggested detail, the Contractor is responsible for the design of the form brace system to be used.

GEOTEXTILE RETAINING WALL
AT EAST ABUTMENT
F.A.S. ROUTE 1536 - SEC. 125BR
MACON COUNTY
STATION 616+26.50
STRUCTURE NO. 058-0132

DESIGNED	Ray Ahanchi
CHECKED	Nick Barnett
DRAWN	BECKY M. LEACH
CHECKED	GRA & NRB

November 14, 2008
EXAMINED Thomas J. Domagalski
ENGINEER OF BRIDGE DESIGN
PASSED Ralph E. Anderson
ENGINEER OF BRIDGES AND STRUCTURES

...\projects\bm10029\0560132.dgn 11/14/2008 8:37:58 AM