F.A.U. RTE.	SECTION	COUNTY	TOTAL SHEETS	SHEET NO.
0085	00-00246-01-FP	MCHENRY	236	133
STA.		TO STA.		
FED. ROAD DIST. NO. 1	ILLINOIS FED. AID PROJECT			

CONTRACT NO: 63266

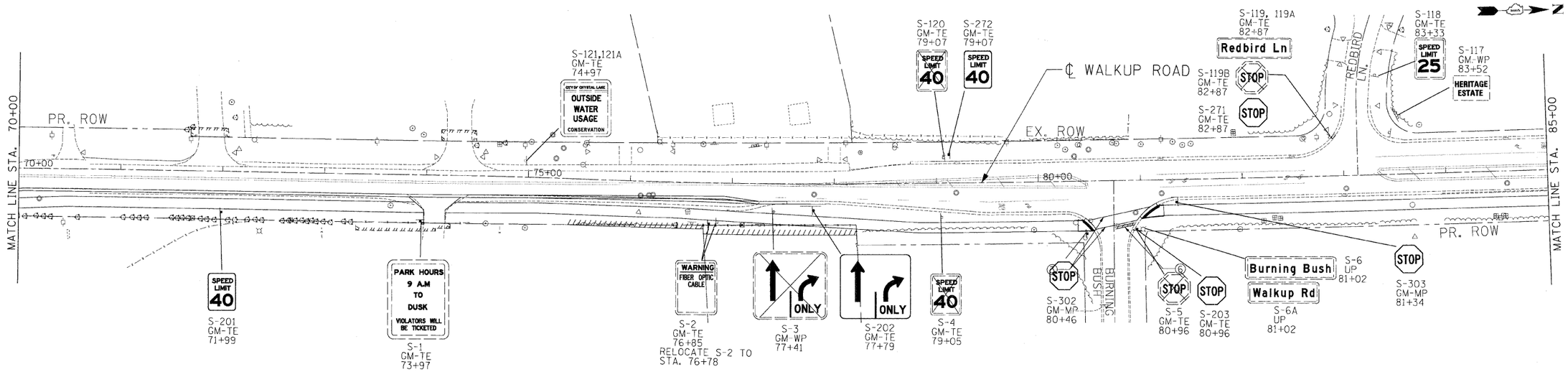

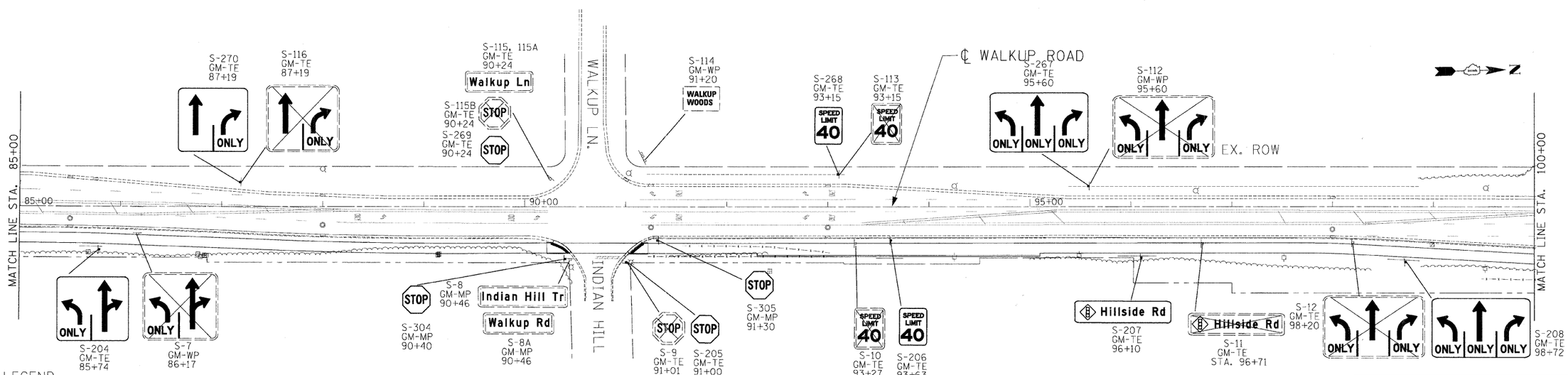

SIGNING LEGEND

- EXISTING SIGN PANEL TO REMAIN
- EXISTING SIGN PANEL TO BE RELOCATED (AT SAME LOCATION UNLESS SPECIFIED)
- EXISTING SIGN PANEL TO BE REMOVED
- PROPOSED SIGN PANEL
- EXISTING GROUND MOUNTED SIGN
- PROPOSED GROUND MOUNTED SIGN

EXISTING PANEL ID / MOUNTING TYPE / EX. STATION
- GM- GROUND MOUNT
- TS- TRAFFIC SIGNAL
- UP- UTILITY POLE

PROPOSED PANEL ID / MOUNTING TYPE / PROP. STATION
- MP- METAL POST
- TE- TELESCOPING STEEL
- WP- WOOD POST

REVISIONS	
NAME	DATE

MCHENRY COUNTY DIVISION OF TRANSPORTATION
WALKUP ROAD F.A.U. 0085

EXISTING & PROPOSED SIGNING WALKUP ROAD STA 70+00 TO STA 100+00

SCALE: 1" = 50'
DRAWN BY: MAM
DATE: 08/17/09
CHECKED BY: BRH

TENG
TENG & ASSOCIATES, INC.
ENGINEERS/ARCHITECTS/PLANNERS
205 N. MICHIGAN AVE. CHICAGO, IL 60601
TELEPHONE: 312/616-0000