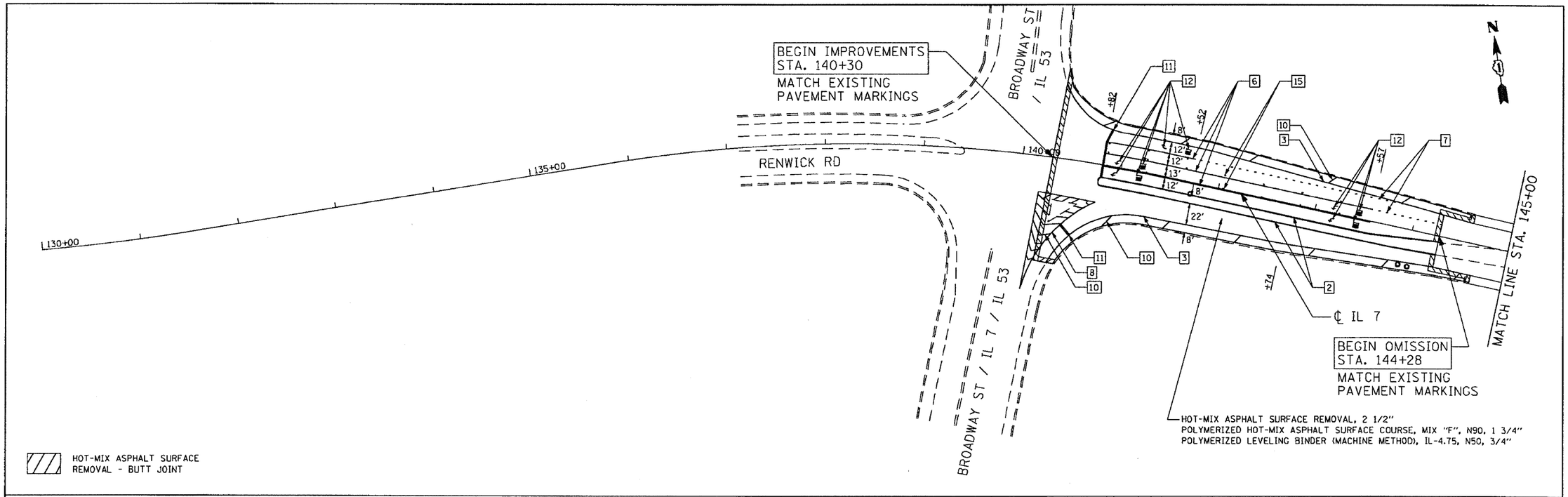

LEGEND:

1. THERMOPLASTIC PAVEMENT MARKING - LINE 4" (DOUBLE YELLOW SOLID LINE 11" C-C)
2. THERMOPLASTIC PAVEMENT MARKING - LINE 4" (YELLOW SOLID LINE)
3. THERMOPLASTIC PAVEMENT MARKING - LINE 4" (WHITE EDGE LINE)
4. THERMOPLASTIC PAVEMENT MARKING - LINE 4" (YELLOW LANE LINE - 10' DASH, 30' SKIP)
5. THERMOPLASTIC PAVEMENT MARKING - LINE 4" (WHITE LANE LINE - 10' DASH, 30' SKIP) WITH RAISED REFLECTIVE PAVEMENT MARKERS (2 ONE-WAY CRYSTAL MARKER) (80' C-C)
6. THERMOPLASTIC PAVEMENT MARKING - LINE 6" (WHITE SOLID LINE)
7. THERMOPLASTIC PAVEMENT MARKING - LINE 6" (WHITE LANE LINE - 2' DASH, 6' SKIP)
8. THERMOPLASTIC PAVEMENT MARKING - LINE 8" (WHITE SOLID LINE)
9. THERMOPLASTIC PAVEMENT MARKING - LINE 12" (YELLOW DIAGONAL LINE)
10. THERMOPLASTIC PAVEMENT MARKING - LINE 12" (WHITE SOLID LINE)
11. THERMOPLASTIC PAVEMENT MARKING - LINE 24" (WHITE STOP LINE)
12. THERMOPLASTIC PAVEMENT MARKING - LETTERS AND SYMBOLS (TYP.)
13. RAISED REFLECTIVE PAVEMENT MARKERS (ONE-WAY AMBER MARKER) (40' C-C)
14. RAISED REFLECTIVE PAVEMENT MARKERS (TWO-WAY AMBER MARKER) (40' C-C)
15. RAISED REFLECTIVE PAVEMENT MARKERS (ONE-WAY CRYSTAL MARKER) (40' C-C)

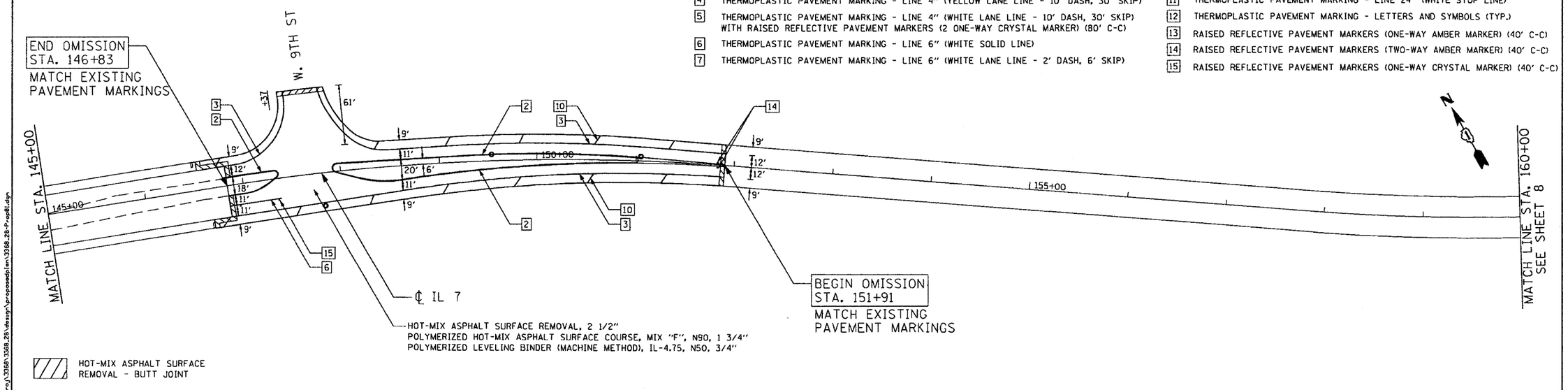

FILE NAME = m:\proj\3368\3368.28\design\proposedplan\3368.28-Prop01.dgn

Ciorba Group, Inc. CONSULTING ENGINEERS 5507 North Cumberland Avenue, Suite 402 Chicago, Illinois 60656 Tel. 773.775.4009 Fax 773.775.4014	USER NAME = wlancaster	DESIGNED - AL	REVISED -	STATE OF ILLINOIS DEPARTMENT OF TRANSPORTATION	IL 7 /159TH STREET IL 53 (INDEPENDENCE BLVD) TO I-355 (VETRANS MEMORIAL TOLLWAY) PROPOSED ROADWAY AND PAVEMENT MARKING PLAN	F.A.P. RTE. 351	SECTION (535 B-6R & 536) RS-4	COUNTY WILL	TOTAL SHEETS 35	SHEET NO. 7
		DRAWN - RJR	REVISED -					CONTRACT NO. 60H62		
	PLOT SCALE = 100.0000 ' / IN.	CHECKED - SNS	REVISED -							
	PLOT DATE = 12/3/2009	DATE - 12/11/09	REVISED -		SCALE: 1"=50' SHEET NO. OF SHEETS STA. TO STA.	FED. ROAD DIST. NO. 1	ILLINOIS	FED. AID PROJECT		