F.A.P. RTE.	SECTION	COUNTY	TOTAL SHEETS	SHEET NO
331	*	**	93	86
STA.		TO STA.		
FED. ROAD DIST. NO.		ILLINOIS	FED. AID PROJECT	

* (1-4)RS, (1-3)RS-1
** JACKSON/WILLIAMSON

98783

BUTT JOINT

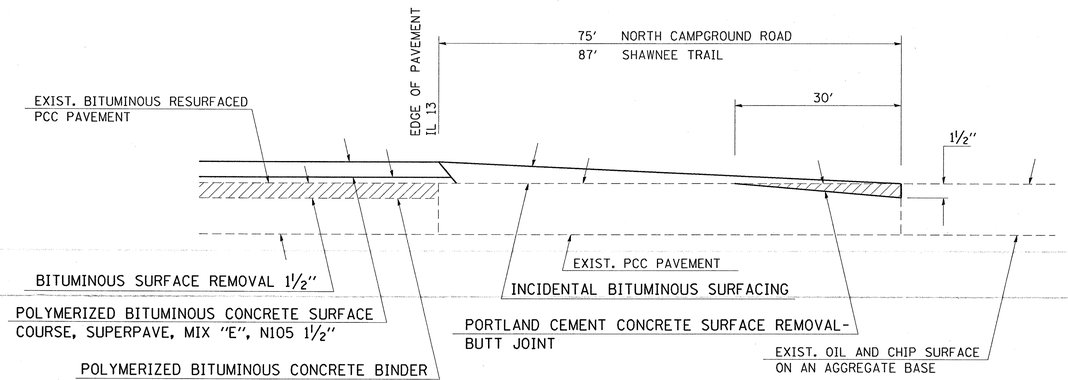

TO BE USED:

NORTH CAMPGROUND ROAD
NORTH SHAWNEE TRAIL

BUTT JOINT

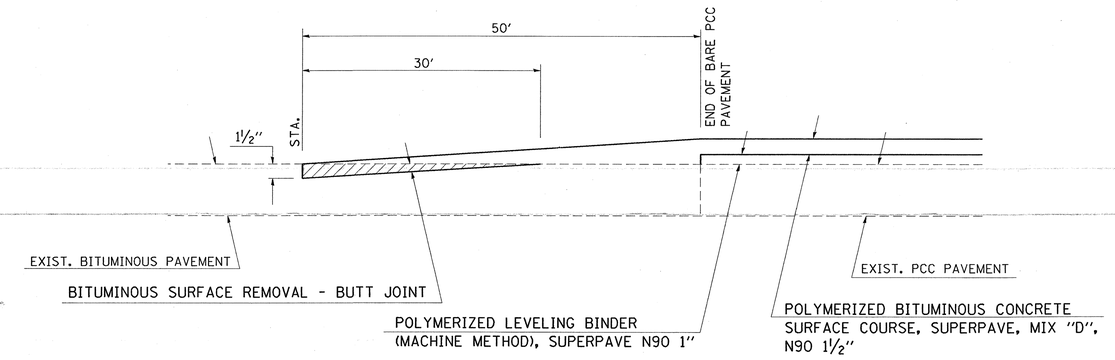

TO BE USED:

STA. 4N+19 DIVISION STREET
STA. 2+18 CAMBRIA ROAD

BUTT JOINT

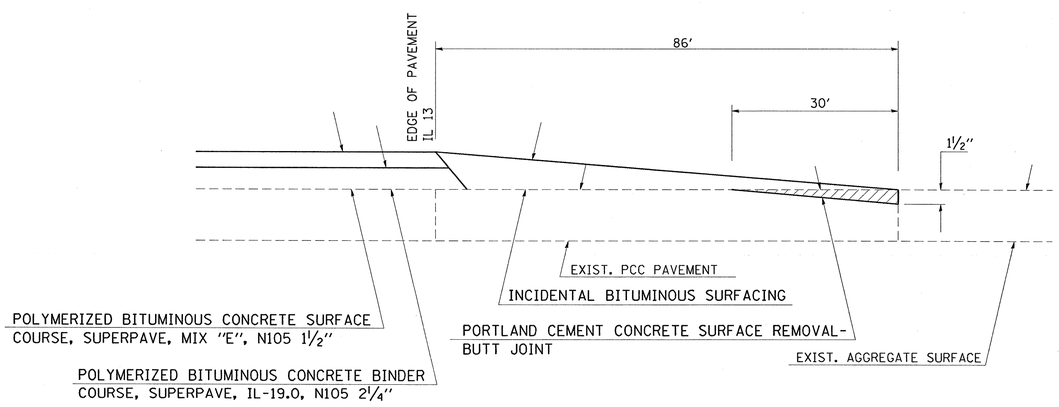

TO BE USED:

HAVEN ROAD

BUTT JOINT

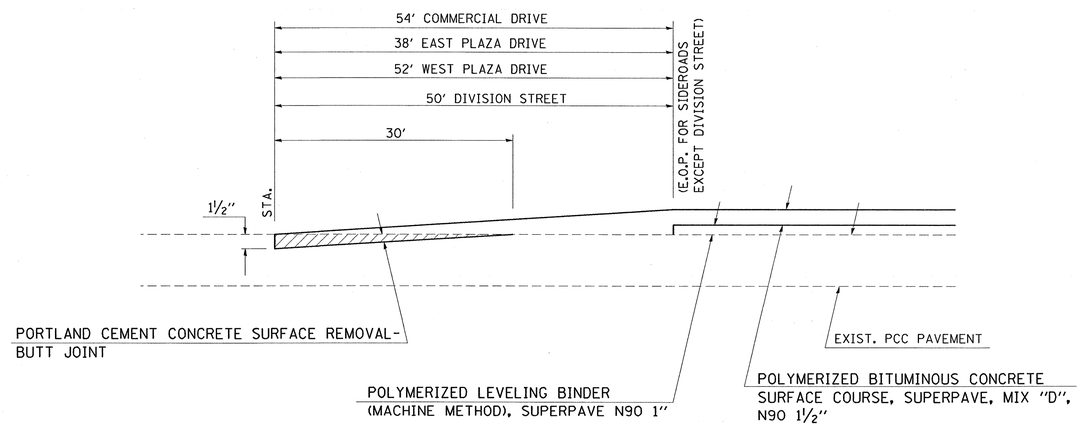

TO BE USED:

STA. 1N+25 DIVISION STREET
STA. 11+15 COMMERCIAL DRIVE
STA. 100+60 EAST PLAZA DRIVE
STA. 20+50 WEST PLAZA DRIVE

Wed Dec 17 14:39:00 2003
c:\projects\d9902003\d9902003d4.dgn LV=1-63

DETAILS: BUTT JOINTS