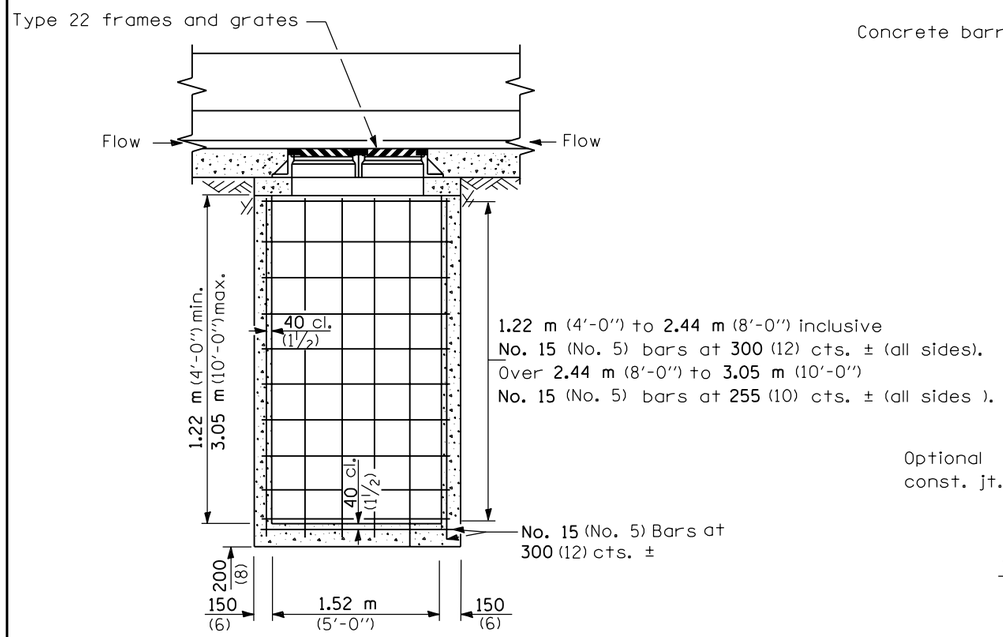

FRONT ELEVATION - TYPE 2

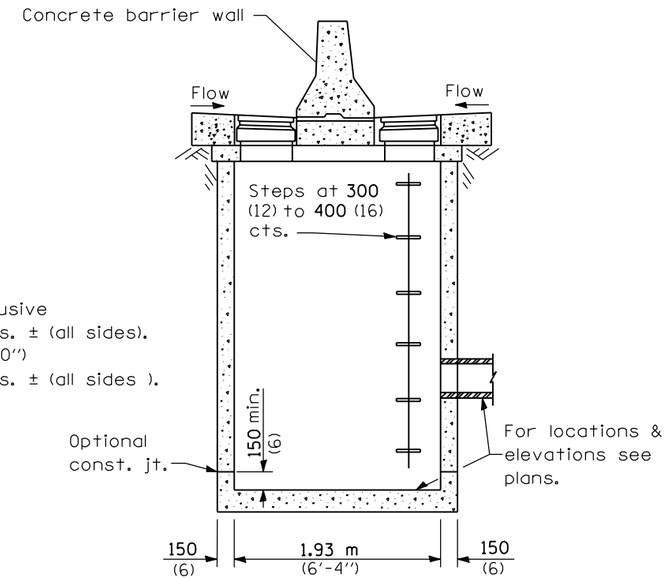

SIDE ELEVATION - TYPE 1 & 2

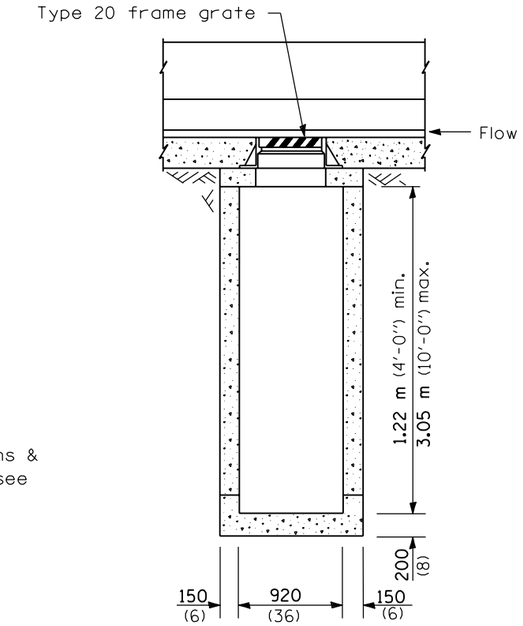

FRONT ELEVATION - TYPE 1

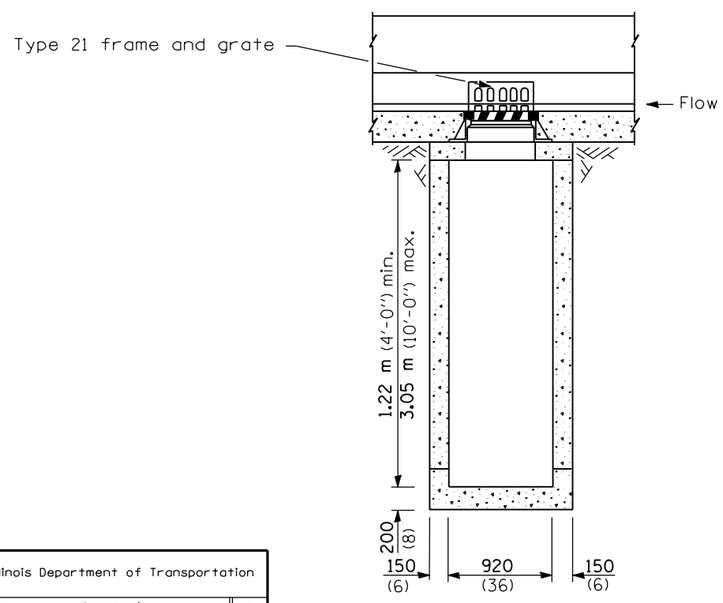

FRONT ELEVATION - TYPE 3

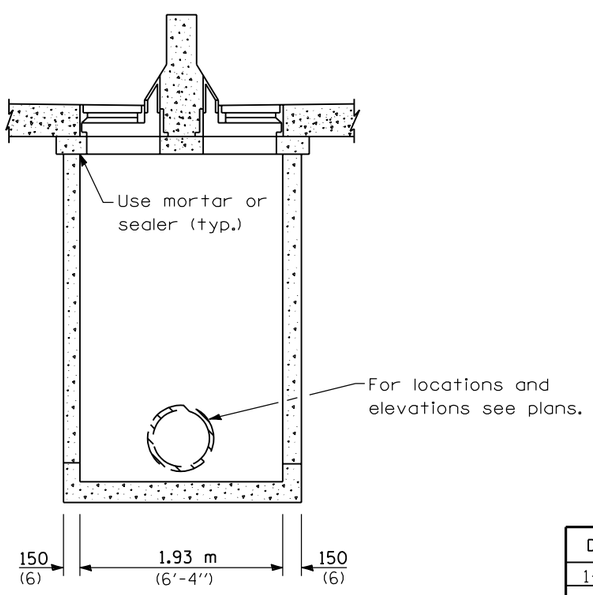

SIDE ELEVATION - TYPE 3

GENERAL NOTES

The reinforcement shown in the front elevation of the type 2 is typical for both elevations of all types.

See Standard 602701 for details of steps.

Exposed edges shall be beveled 19 mm (3/4").

All dimensions are in millimeters (inches) unless otherwise shown.

Illinois Department of Transportation

PASSED January 1, 1997
ENGINEER OF POLICY AND PROCEDURES

APPROVED January 1, 1997
ENGINEER OF DESIGN AND ENVIRONMENT

ISSUED 1-1-97

DATE	REVISIONS
1-1-97	Renum. Standard 2384-2,
	Deleted DN Symbol.
6-15-94	Moved GN to Specs.
	Moved DN moved steps
	to 2447, Rem. Cook Cty.
	note.

DRAINAGE STRUCTURES TYPES 1, 2 & 3

(Sheet 1 of 2)

STANDARD 602101

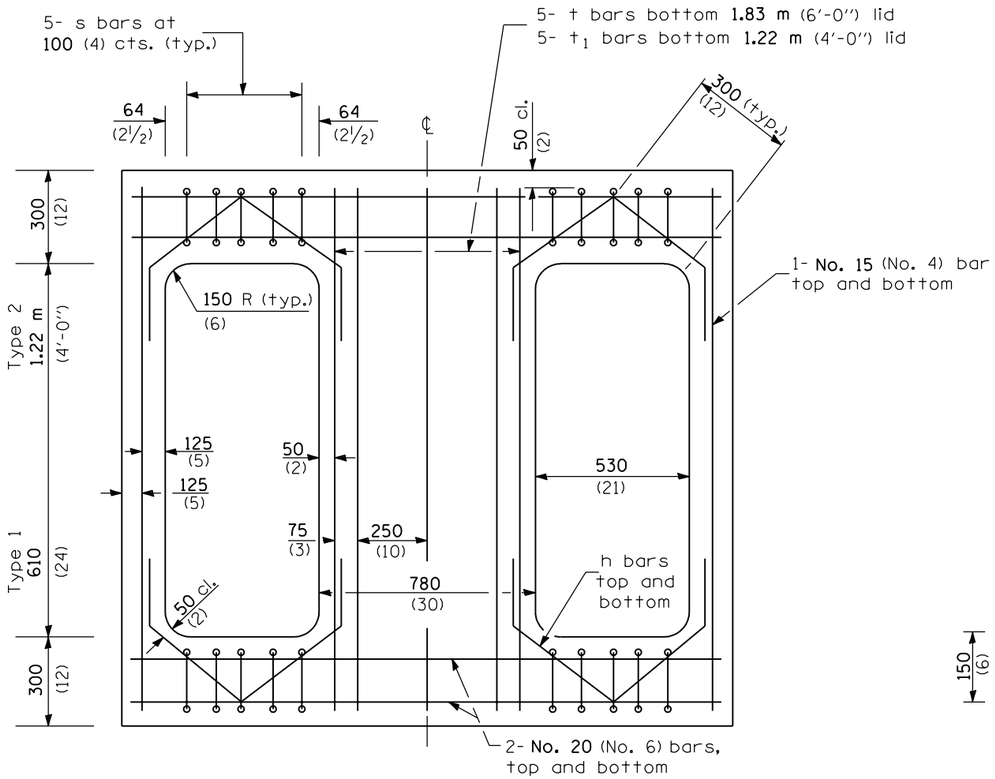

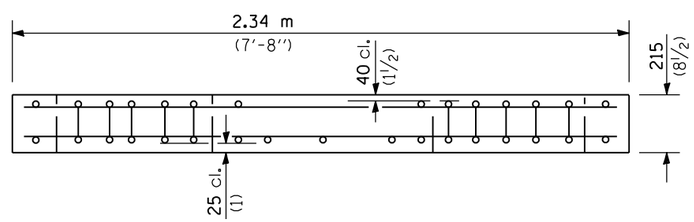

REINFORCED LID - TYPE 1 & 2

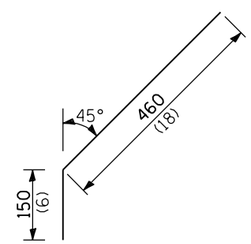

No. 15 (No. 4) Bar h

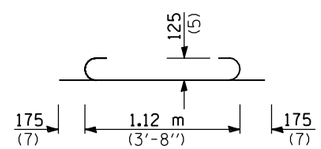

No. 15 (No. 5) Bar t_1

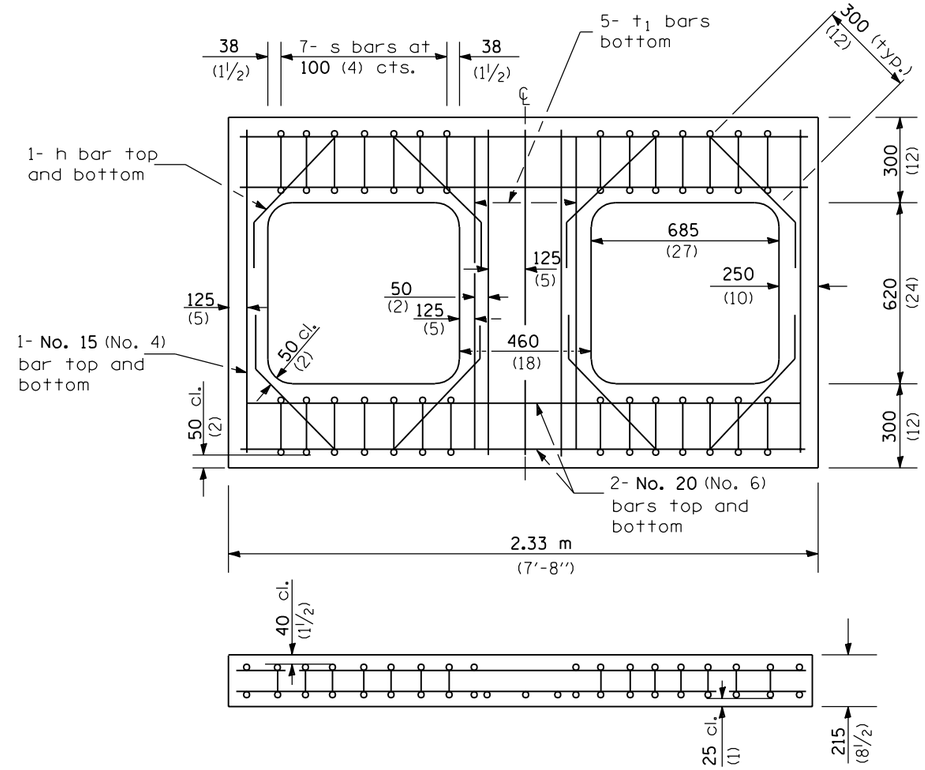

REINFORCED LID - TYPE 3

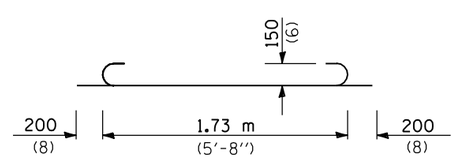

No. 20 (No. 6) Bar t

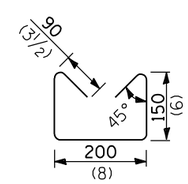

No. 10 (No. 3)Bar s

All dimensions are in millimeters (inches) unless otherwise shown.

Illinois Department of Transportation

PASSED January 1, 1997
ENGINEER OF POLICY AND PROCEDURES

APPROVED January 1, 1997
ENGINEER OF DESIGN AND ENVIRONMENT

ISSUED 1-1-97

DRAINAGE STRUCTURES TYPES 1, 2 & 3

(Sheet 2 of 2)

STANDARD 602101