FAU	SECTION	COUNTY	TOTAL SHEETS	SHEET NO.
2667	02-00165-00-RP	DUPAGE	87	56
STA.		TO STA.		
FED. ROAD DIST. NO. 7	ILLINOIS	FED. AID PROJECT		

CONTRACT NO. 83768

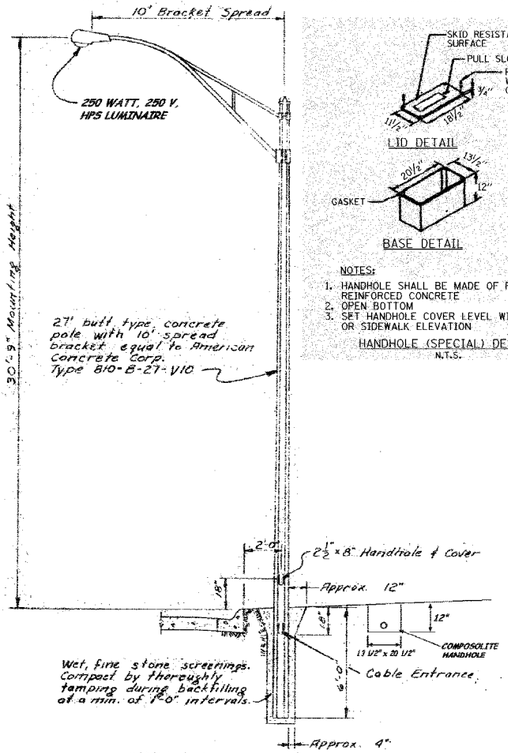

DETAIL OF LIGHT POLE, BRACKET & LUMINAIRE

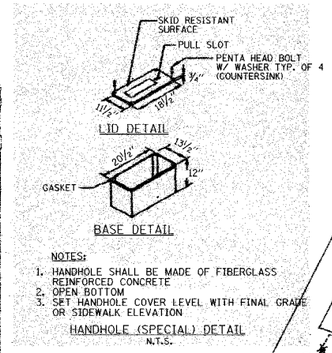

NOTES:
1. HANDHOLE SHALL BE MADE OF FIBERGLASS REINFORCED CONCRETE
2. OPEN BOTTOM
3. SET HANDHOLE COVER LEVEL WITH FINAL GRADE OR SIDEWALK ELEVATION

HANDHOLE (SPECIAL) DETAIL
N.T.S.

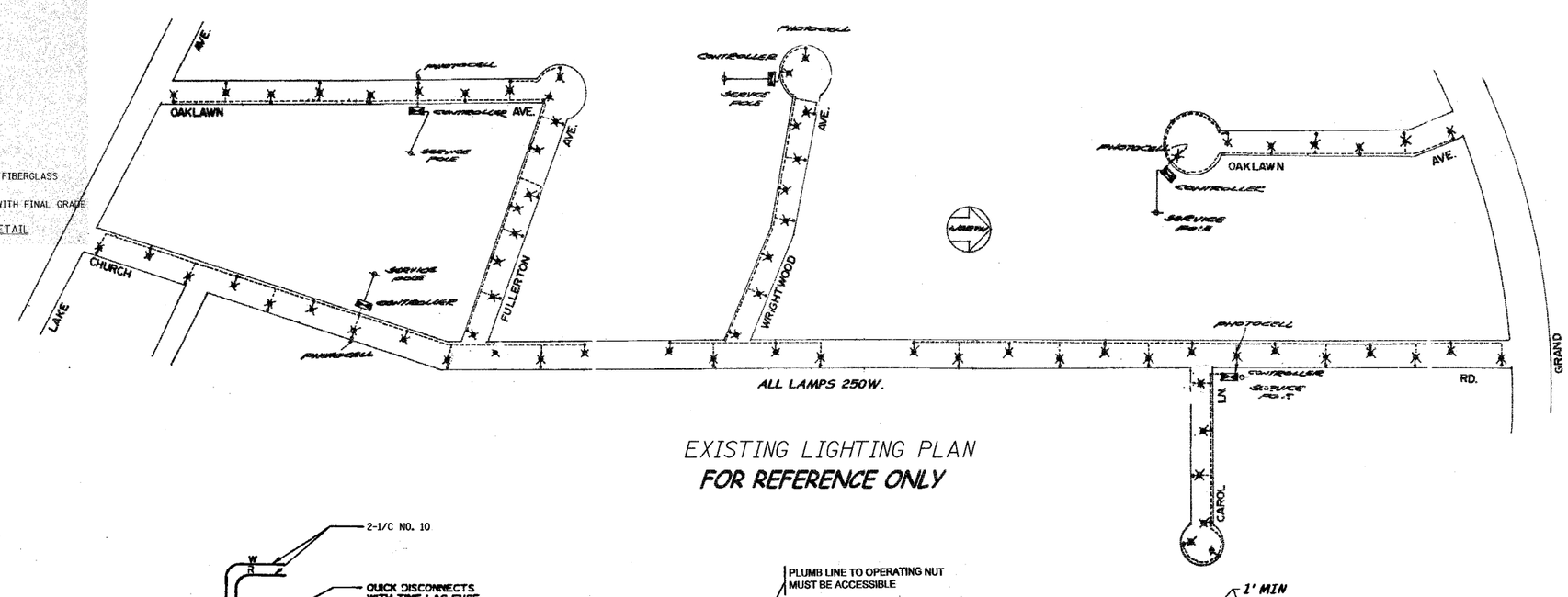

EXISTING LIGHTING PLAN
FOR REFERENCE ONLY

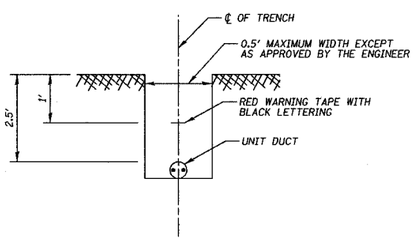

TRENCH CROSS SECTION

SPLICING ELECTRIC CABLES BASIC MATERIALS AND METHODS

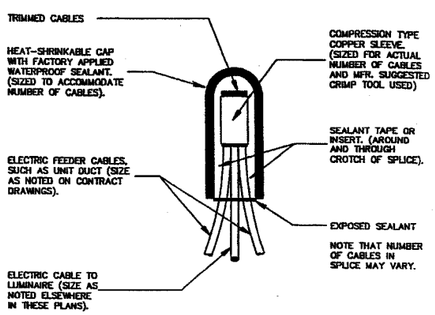

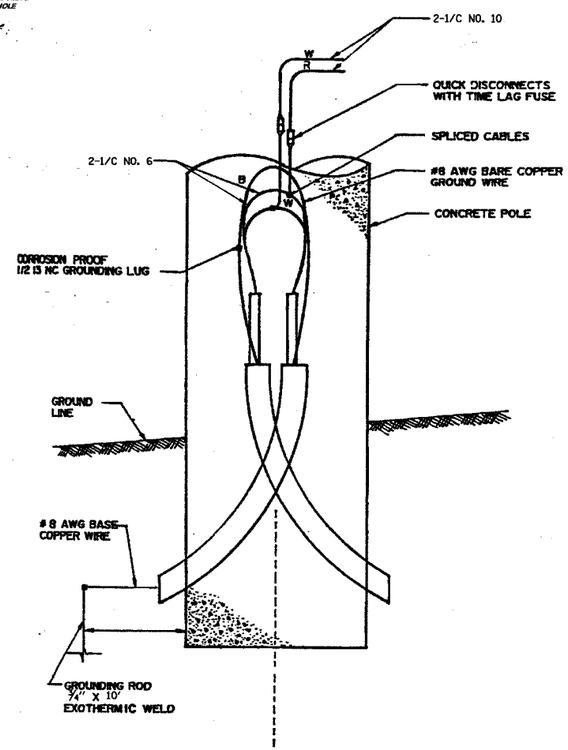

POLE BASE WIRING WITH QUICK DISCONNECTS AND POLE GROUNDING DETAILS

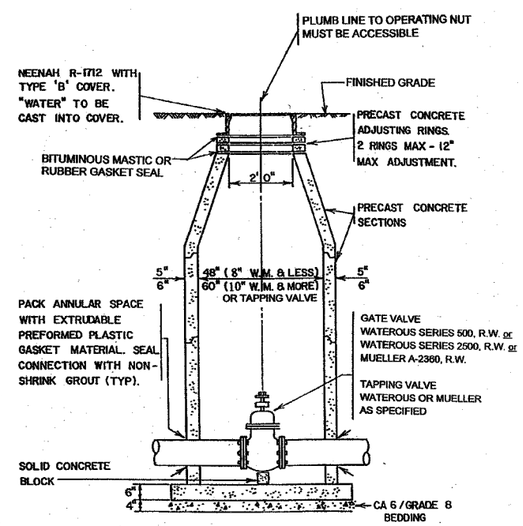

NOTE: 1. USE 60" VAULT FOR ALL PRESSURE CONNECTIONS
2. PIPE OPENINGS SHALL BE CAST INTO WALLS.

CITY OF ELMHURST
VALVE AND VAULT DETAIL

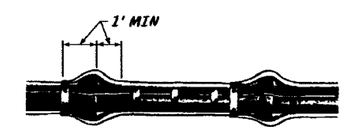

Note: One Length Of Polyethylene Tube For Each Length Of Pipe, Overlapped At Joint

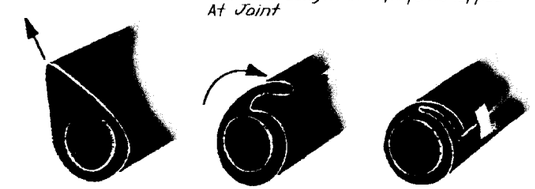

Take Up Slack In The Tube Along The Barrel Of The Pipe To Make A Snug, But Not Tight, Fit.

Fold Excess Polyethylene Back Over The Top Of The Pipe.

Secure The Fold At Several Locations Along The Pipe Barrel (Approx. Every

Note: Repair All Small Rips, Tears Or Other Tube Damage With Adhesive Tape.

POLYETHYLENE ENCASEMENT

REVISIONS	
NAME	DATE

ILLINOIS DEPARTMENT OF TRANSPORTATION
LIGHTING AND WATER MAIN DETAILS
CHURCH ROAD, OAKLAWN AVENUE, FULLERTON AVENUE, AND WRIGHTWOOD AVENUE

DATE 7-9-04
DRAWN BY SAH
CHECKED BY MJL
SCALE: NONE

PLAN — SURVEYED / PLOTTED / ALIGNMENT CHECKED / R/W OF WAY CHECKED / 2000 FILE NAME — NOTE BOOK NO. — DATE

PROFILE — SURVEYED / PLOTTED / PROFILE CHECKED / S.A.P. NOTES / STRUCTURE INSTALLATION CHECKED — NOTE BOOK NO. — BY — DATE

TRANSYSTEMS CORPORATION