STATE OF ILLINOIS
DEPARTMENT OF TRANSPORTATION

ROUTE NO.	SECTION	COUNTY	TOTAL SHEETS	SHEET NO.
FAP 599	42 MFT-T	ROCK ISLAND	90	44
FED. ROAD DIST. NO. 7		ILLINOIS	FED. AID PROJECT-	

SHEET NO. 3
4 SHEETS

Contract No. 64641

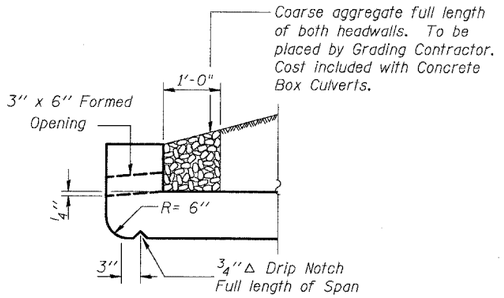

DRAIN DETAIL

Upstream & Downstream Ends

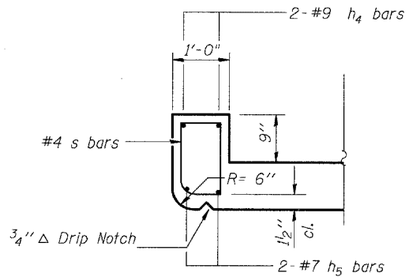

HEADWALL REINFORCEMENT DETAIL

Upstream & Downstream Ends

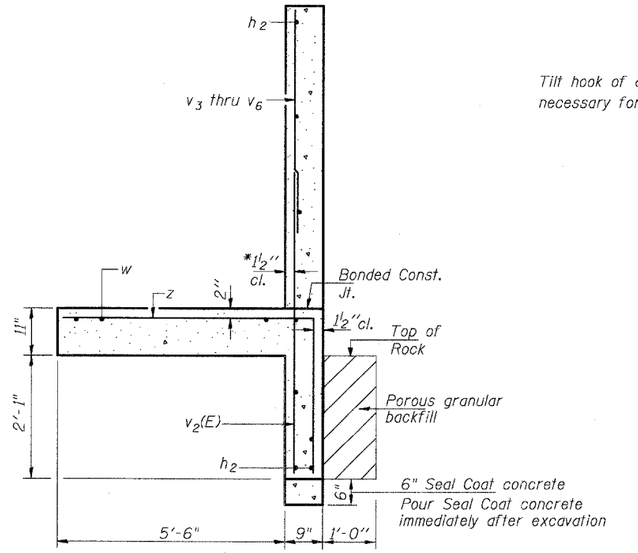

SECTION B-B

* v_2(E) bars shall not be placed more than 1 1/2" cl. from back face of wingwalls.

Maximum footing pressure = 3060 lbs/sq. ft.

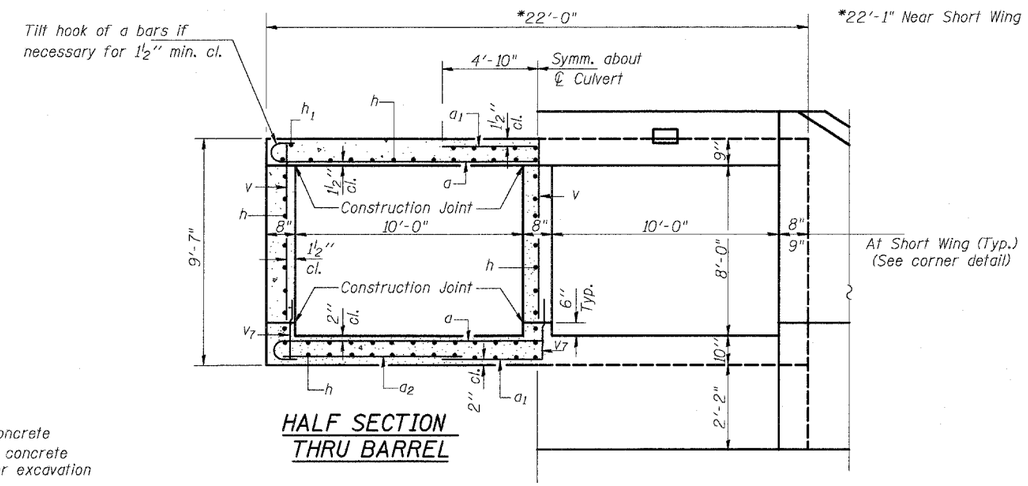

HALF SECTION THRU BARREL

HALF END ELEVATION

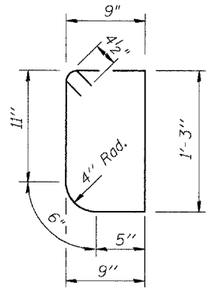

BAR s

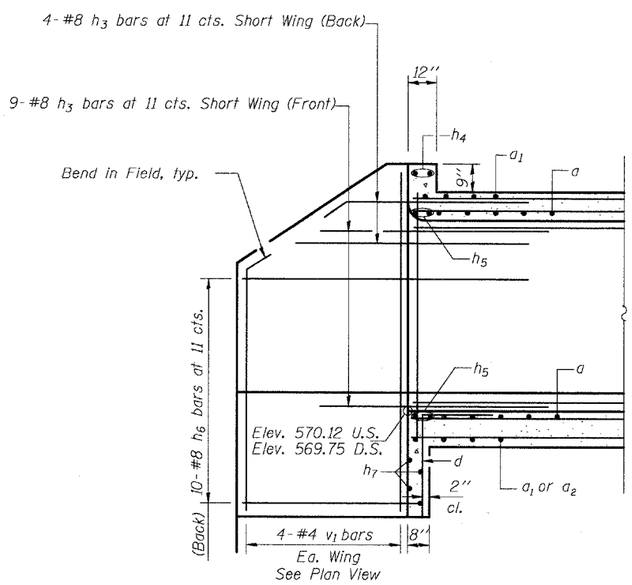

REINFORCEMENT DETAILS SHORT WING

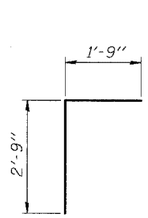

BAR d

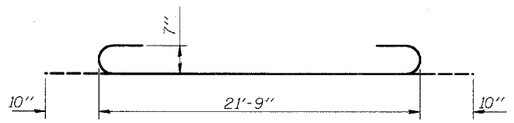

BAR a

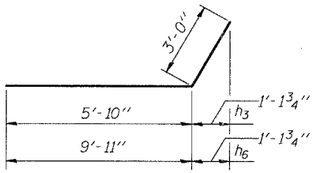

BARS h_3 & h_6

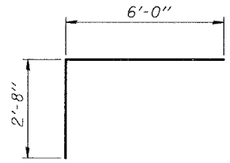

BAR z

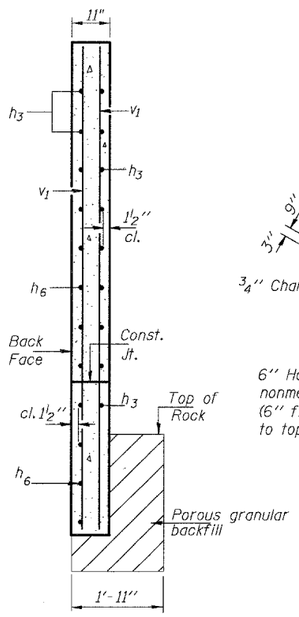

SECTION A-A

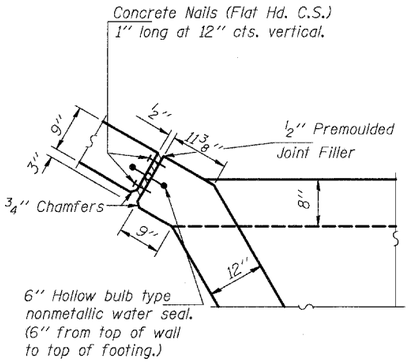

CORNER DETAIL (LONG WING)

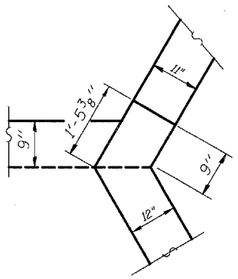

CORNER DETAIL (SHORT WING)

DESIGNED	-	J.L.K.
CHECKED	-	K.R.G.
DRAWN	-	M.D.-P.W.S.
CHECKED	-	K.R.G.

MISCELLANEOUS DETAILS
FAP ROUTE 599 - SECTION 42 MFT-T
ROCK ISLAND COUNTY
STATION 332+98.50
STRUCTURE NO. 081-1008

Work this Sheet with Sheet No. 2 of 4.

MID-AMERICA ENGINEERING SERVICES
975 South Durkin Dr, Springfield IL 62704