STATE OF ILLINOIS
DEPARTMENT OF TRANSPORTATION

ROUTE NO.	SECTION	COUNTY	TOTAL SHEETS	SHEET NO.
		Cook	14	8
FED. ROAD DIST. NO. 7		ILLINOIS	FED. AID PROJECT-	

SHEET NO. 2
4 SHEETS

Contract Number: 62912

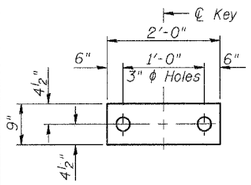

FABRIC BEARING PAD
(Interior)
FIXED

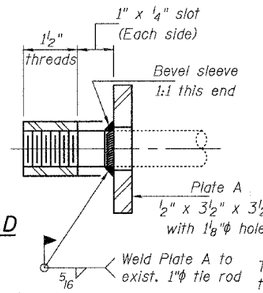

SECTION A-A
(9 Required)

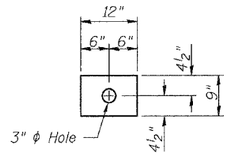

FABRIC ADJUSTING SHIM
(Fixed)

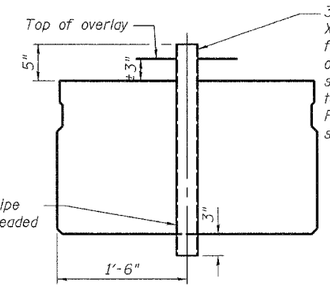

TYPICAL DRAIN SECTION
(Beam 3)

Notes:
Place strands symmetrically about ℄ of beam.
See deck cross-sections for additional bars cast with deck beams.

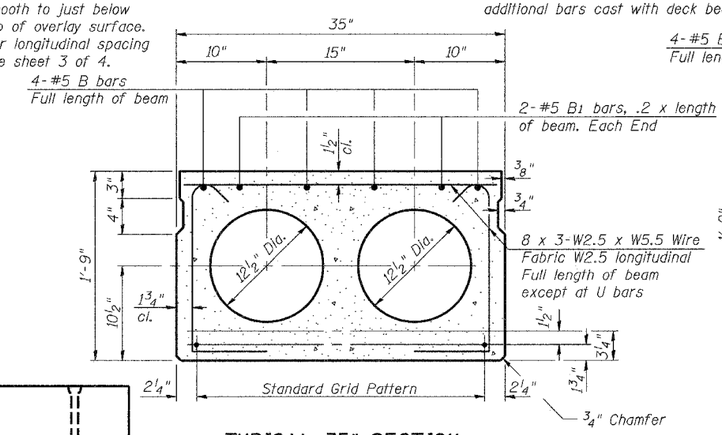

TYPICAL 35" SECTION
½" ϕ Strands, Each Strand Stressed to 30,900 Lbs.
6-Strands 1¾" up, 4-Strands 3¼" up
(2 Required)

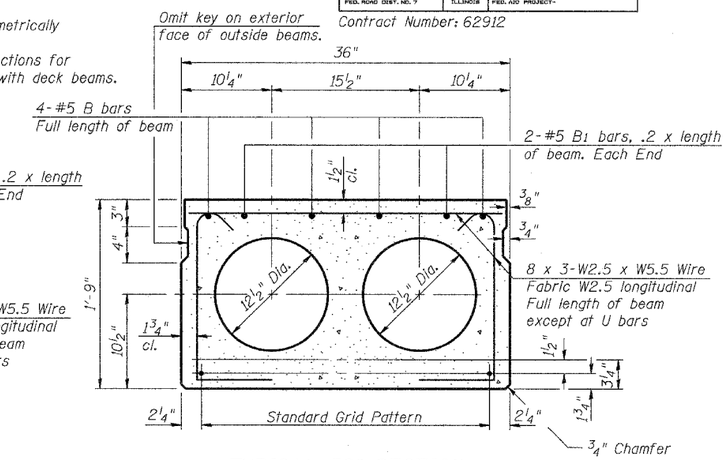

TYPICAL 36" SECTION
½" ϕ Strands, Each Strand Stressed to 30,900 Lbs.
6-Strands 1¾" up, 4-Strands 3¼" up
(3 Required)

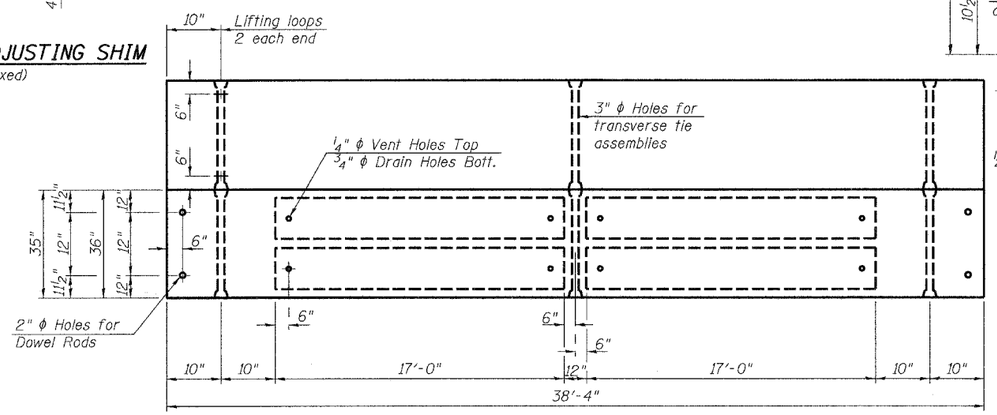

PLAN BEAMS 1, 2, 9 OR 12

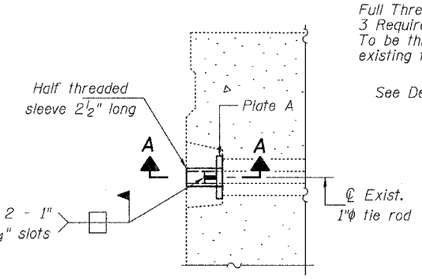

DETAIL B

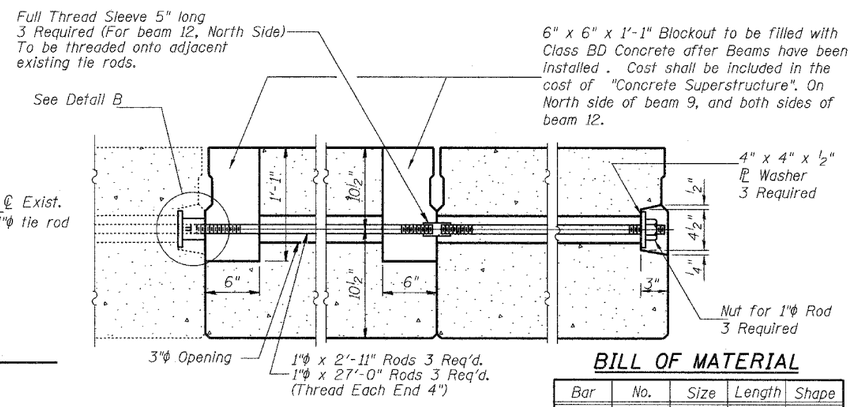

TYPICAL TRANSVERSE TIE ASSEMBLY

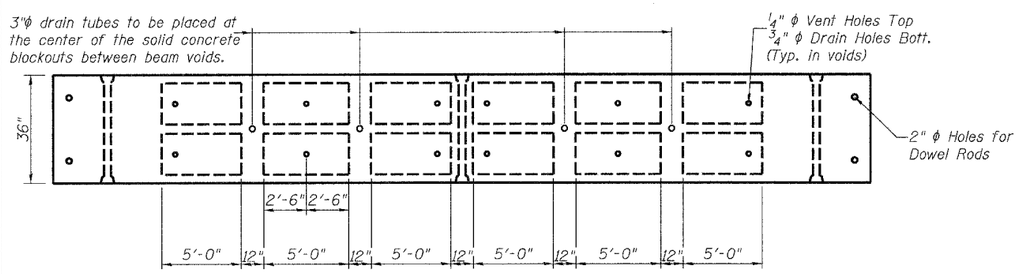

PLAN BEAM 3
See Plan for Beams 1, 2, 9 or 12 for dimensions and notes not shown.

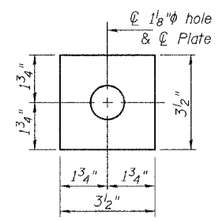

PLATE A
(9 Required)

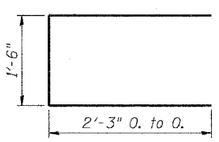

BAR U

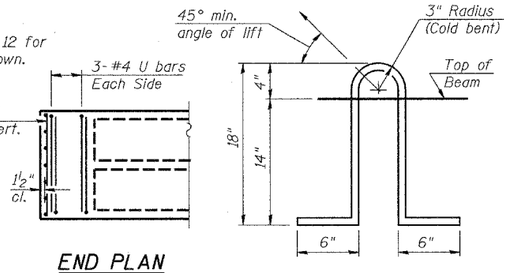

END PLAN

LIFTING LOOP DETAIL

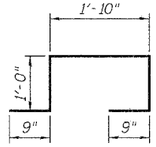

BAR D(E)

NOTES

Prestressing steel shall be uncoated high strength, low relaxation 7-wire strand, Grade 270.
The nominal diameter shall be ½" and the nominal cross-sectional area shall be 0.153 sq. in.
Lifting loops shall be 2-½" ϕ-270 ksi strands, as shown.
The 1" ϕ rods in the transverse tie assembly shall be tightened to a snug fit and the threads set. Pockets that receive transverse tie bar on outside shall be filled with grout after transverse tie assembly is in place.
Non prestressing steel shall conform to AASHTO M-31 or M322 Grade 60.
The bearing seat surfaces shall be adjusted by shimming to assure firm and even bearing. Two ⅛" fabric adjusting shims of the dimensions shown shall be provided for each bearing.
Keyway surfaces shall be cleaned to remove form oil or other bond breaking material prior to shipment of the beams. Cleaning shall be done by sandblasting the keyway areas between top of the beam and the bottom edge of the key.
Corrosion Inhibitor, as covered in the Special Provisions, shall be used in the concrete for precast prestressed concrete deck beams.
Required Release Strength, f'ci, shall be 4000 p.s.i.

BILL OF MATERIAL

Bar	No.	Size	Length	Shape
PPC Deck Beams (21" Depth)			Sq. Ft.	569

DESIGNED	V.H.V.
CHECKED	S.J.B.
DRAWN	Drew Christopher
CHECKED	V.H.V. S.J.B.

May 3, 2005
EXAMINED John A. Morris — ENGINEER OF STRUCTURAL SERVICES
PASSED Ralph E. Anderson — ENGINEER OF BRIDGES AND STRUCTURES

PD-3-S 10-22-04

BEAM DETAILS
F.A.P. RT. 343
COOK COUNTY
SN 016-0525

...\version 8 archive\0160525.dgn 5/6/2005 10:11:23 AM