STATE OF ILLINOIS
DEPARTMENT OF TRANSPORTATION

ROUTE NO.	SECTION	COUNTY	TOTAL SHEETS	SHEET NO.
F.A.I. 80	37-1HBR -1	HENRY	133	70
FED. ROAD DIST. NO. 7		ILLINOIS	FED. AID PROJECT-	

SHEET NO. 7
18 SHEETS

Contract #64602

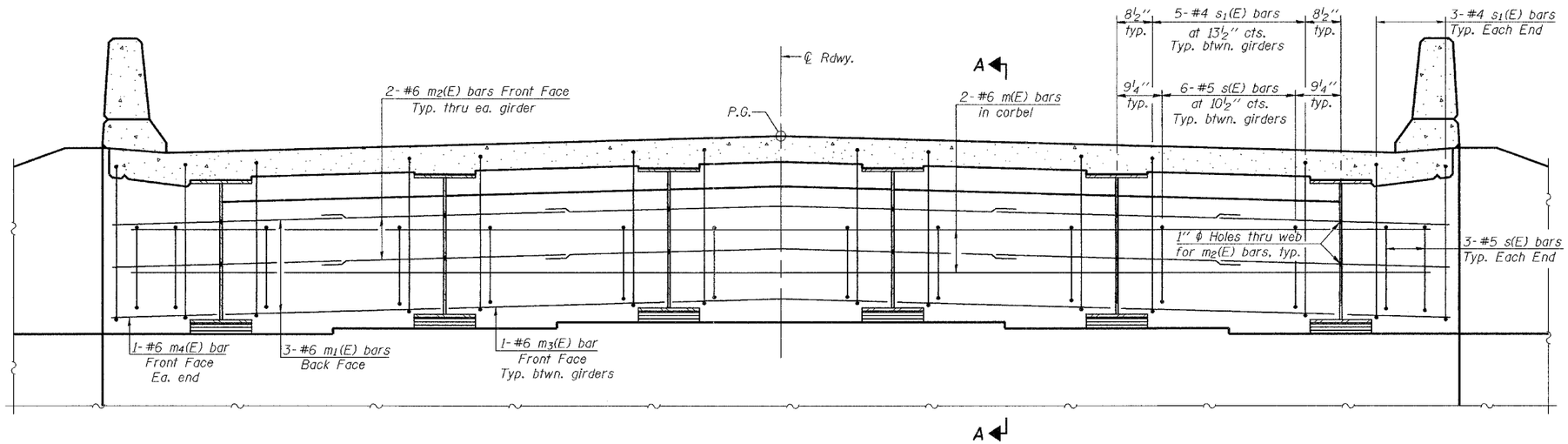

DIAPHRAGM ELEVATION AT ABUTMENT

(Bearing Stiffeners not shown)

Notes: Reinforcement bars in diaphragm are billed with superstructure on sheet 6 of 18.
Concrete in diaphragm is included with Concrete Superstructure on sheet 6 of 18.
For details of bars s(E) & s1(E) see sheet 6 of 18.
For anchor bolt details see sheet 11 of 18.

MIN. BAR LAP

#6 bar = 2'-9"

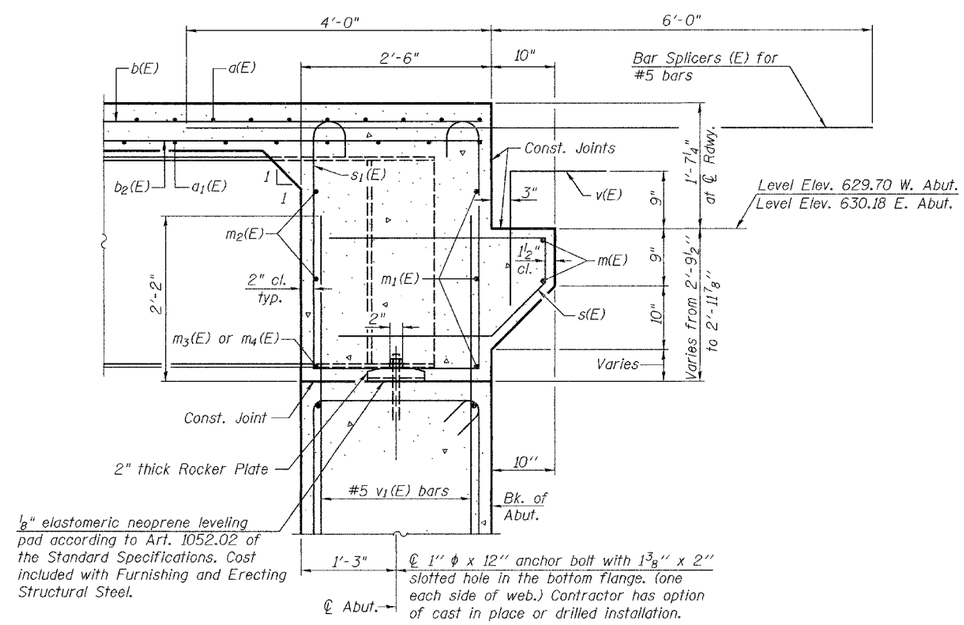

SECTION A-A

DESIGNED	Michael D. Cima
CHECKED	Phillip R. Litchfield
DRAWN	R. Sommer
CHECKED	MDC/PRL

September 25 2006
EXAMINED Thomas J. Domagalski
ENGINEER OF BRIDGE DESIGN
PASSED Ralph E. Anderson
ENGINEER OF BRIDGES AND STRUCTURES

DIAPHRAGM DETAILS
F.A.I. RT. 80 SEC. 37-1HBR-1
HENRY COUNTY
STATION 461+73.82
STRUCTURE NO. 037-0171

...\projects\rjs00005\0370171.dgn 9/25/2006 10:55:03 AM