CONTRACT NO. 83980

| County Highway | Fiscal Year | Sheet No. | Total Sheets |
|---|---|---|---|
| | | 124 | 167 |

Section 05-00083-00-FP

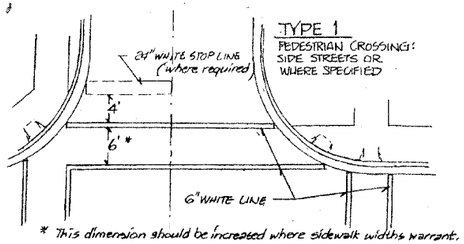


TYPE 1
PEDESTRIAN CROSSING: SIDE STREETS OR WHERE SPECIFIED

* This dimension should be increased where sidewalk widths warrant.

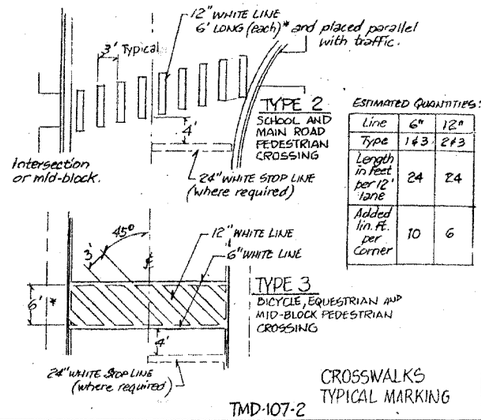


TYPE 2
SCHOOL AND MAIN ROAD PEDESTRIAN CROSSING

ESTIMATED QUANTITIES:

| Line | 6" | 12" |
|---|---|---|
| Type | 1 & 3 | 2 & 3 |
| Length in feet per 12' lane | 24 | 24 |
| Added lin. ft. per Corner | 10 | 6 |

TYPE 3
BICYCLE, EQUESTRIAN AND MID-BLOCK PEDESTRIAN CROSSING

CROSSWALKS
TYPICAL MARKING

TMD-107-2

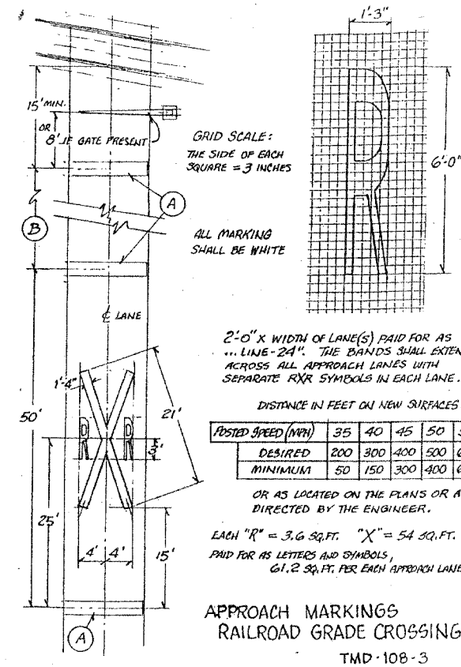





GRID SCALE:
THE SIDE OF EACH SQUARE = 3 INCHES

ALL MARKING SHALL BE WHITE

2'-0" X WIDTH OF LANE(S) PAID FOR AS ... LINE-24". THE BANDS SHALL EXTEND ACROSS ALL APPROACH LANES WITH SEPARATE R/R SYMBOLS IN EACH LANE.

DISTANCE IN FEET ON NEW SURFACES:

| POSTED SPEED (MPH) | 35 | 40 | 45 | 50 | 55 |
|---|---|---|---|---|---|
| DESIRED | 200 | 300 | 400 | 500 | 600 |
| MINIMUM | 50 | 150 | 300 | 400 | 600 |

OR AS LOCATED ON THE PLANS OR AS DIRECTED BY THE ENGINEER.

EACH "R" = 3.6 SQ.FT. "X" = 54 SQ.FT.
PAID FOR AS LETTERS AND SYMBOLS, 61.2 SQ.FT. PER EACH APPROACH LANE.

APPROACH MARKINGS
RAILROAD GRADE CROSSINGS

TMD-108-3

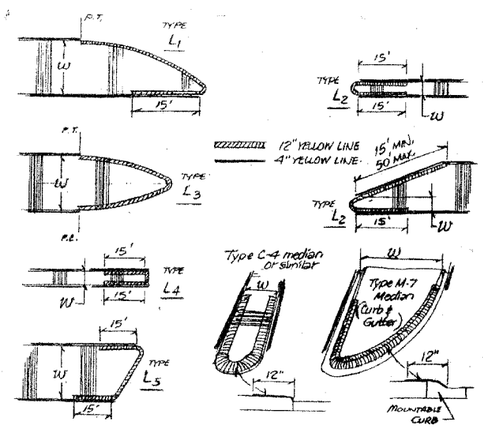


TABLE M12

TOTAL APPROXIMATE LENGTH IN FEET FOR 12" YELLOW LINE

| | W | 2' | 4' | 6' | 8' | 10' | 12' | 14' | 16' |
|---|---|---|---|---|---|---|---|---|---|
| TYPE | $L_1$ | – | – | – | 40 | 45 | 50 | 55 | 60 |
| | $L_2$ | 31 | 35 | 38 | 41 | 44 | 45 | 49 | 58 |
| | $L_3$ | – | – | – | 36 | 41 | 45 | 49 | 58 |
| | $L_4$ | 32 | 34 | 36 | 38 | – | – | – | – |
| | $L_5$ | – | – | 37 | 40 | 43 | 46 | 48 | 51 |

TWO WAY TRAFFIC:

MOUNTABLE MEDIANS
TYPICAL NOSE MARKING

TMD-109-3

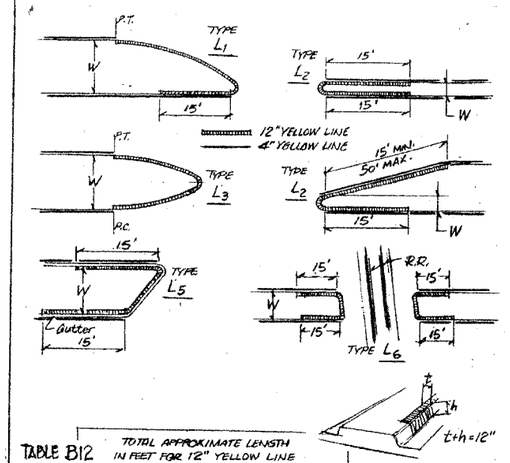


TABLE B12

TOTAL APPROXIMATE LENGTH IN FEET FOR 12" YELLOW LINE

| | W | 2' | 4' | 6' | 8' | 10' | 12' | 14' | 16' |
|---|---|---|---|---|---|---|---|---|---|
| TYPE | $L_1$ | – | – | – | 40 | 45 | 50 | 55 | 60 |
| | $L_2$ | 31 | 35 | 38 | 41 | 44 | 49 | 50 | 54 |
| | $L_3$ | – | – | – | 36 | 41 | 45 | 49 | 58 |
| | $L_5$ | – | – | 37 | 40 | 43 | 46 | 48 | 51 |
| | $L_6$ | – | – | 36 | 38 | 40 | 42 | 44 | 46 |

EACH APPROACH

TWO WAY TRAFFIC:

BARRIER MEDIANS
TYPICAL NOSE MARKING

TMD-110-2

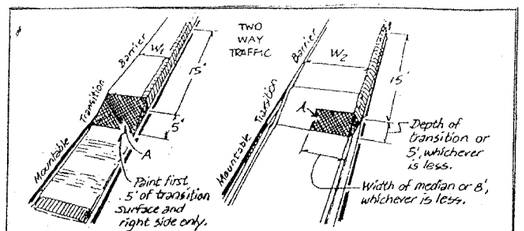


MOUNTABLE TO BARRIER MEDIANS
TYPICAL TRANSITION MARKING

12" YELLOW LINE
YELLOW-MEDIAN
4" YELLOW LINE
12" OR 6" WHITE LINE (as noted)

APPROXIMATE AREA IN SQ.FT. FOR PAINTED YELLOW MEDIAN (A)

| TABLE MB | $W_1$ | | | | $W_2$ |
|---|---|---|---|---|---|
| | 2' | 4' | 6' | 8' | 8'-16' |
| A | 11.2 | 21.3 | 31.3 | 41.3 | 41.3 |

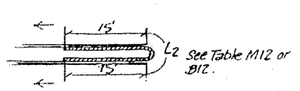


See Table M12 or B12.

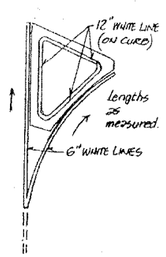


GENERAL NOTE:

Special conditions not shown on these standards shall be marked in accordance with plans submitted for the specific location. Where plans are not available, the markings shall be in accordance with the applicable portions in Part III of the 1988 edition of the Manual on Uniform Traffic Control Devices, the March, 1990 Illinois Supplement to the Manual and as specified by the Traffic Engineer.

BARRIER ISLANDS
TYPICAL MARKING

TMD-111-3

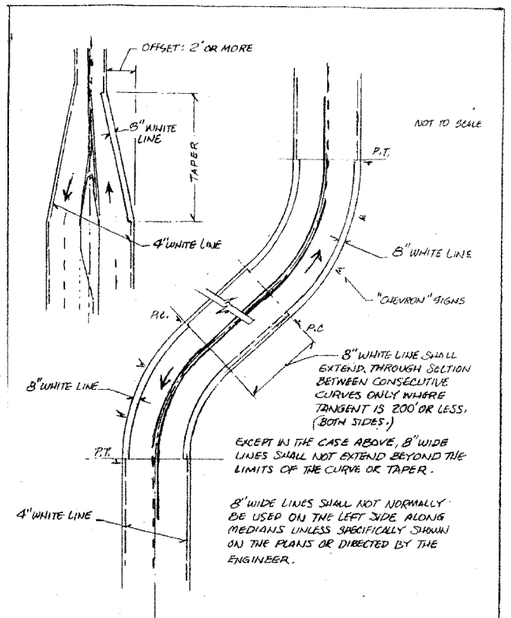


NOT TO SCALE

TYPICAL MARKING:
EDGELINE ALONG CURVES AND LANE REDUCTIONS

TMD-112-3

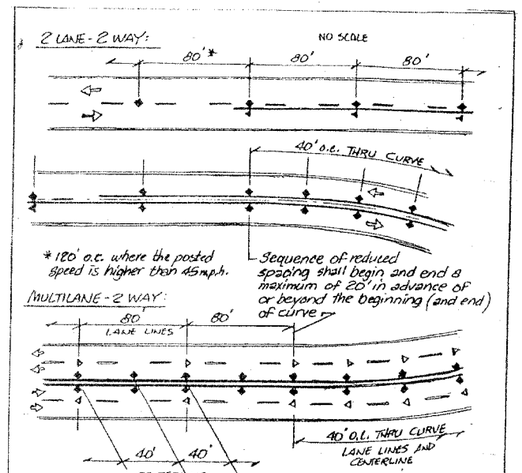


Unless otherwise directed, markers shall not be used adjacent to a raised median.

NOTES: Markers shall be offset 2" to 3" from adjacent line marking.

Markers shall be located in the center of the gap between segments of skip-dash lines.

MARKER SYMBOLS:
◀ ONE-WAY YELLOW
◆ TWO-WAY YELLOW
◁ ONE-WAY WHITE

2 LANE AND MULTILANE ROADWAYS

TYPICAL APPLICATION
RAISED REFLECTIVE PAVEMENT MARKERS

TMD-113A-1

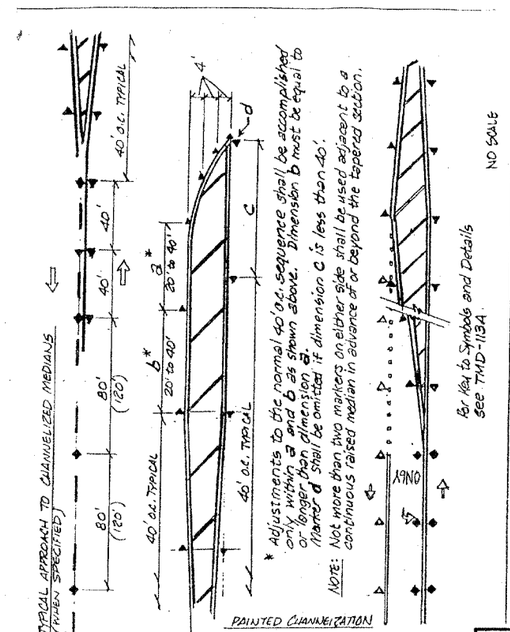


PAINTED CHANNELIZATION

TYPICAL APPLICATION
RAISED REFLECTIVE PAVEMENT MARKERS

TMD-113B-2

COUNTY OF COOK
DEPARTMENT OF HIGHWAYS

PERMANENT PAVEMENT MARKING STANDARDS
(SHEET 2 OF 2)

COMPUTED ____ APPROVED ____ 19__
DRAWN ____
CHECKED ____
HIGHWAY ENGINEER OF COOK

2-85-TOK CWD 4-92

2-85 CWD 8-86 7-90