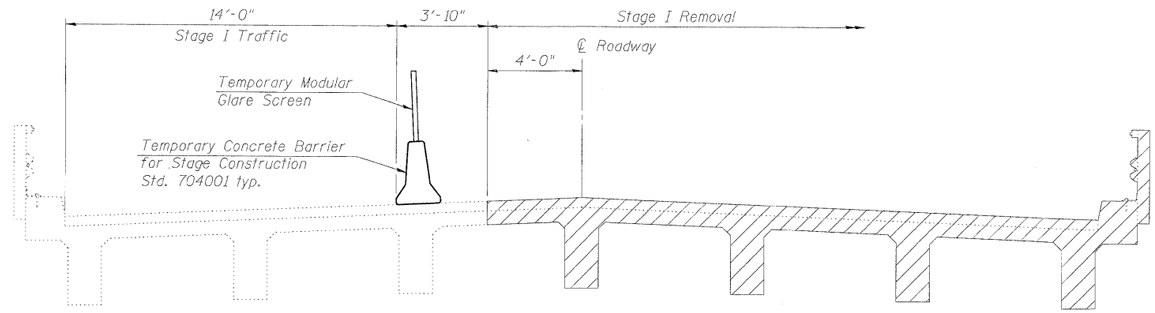

STAGE I REMOVAL

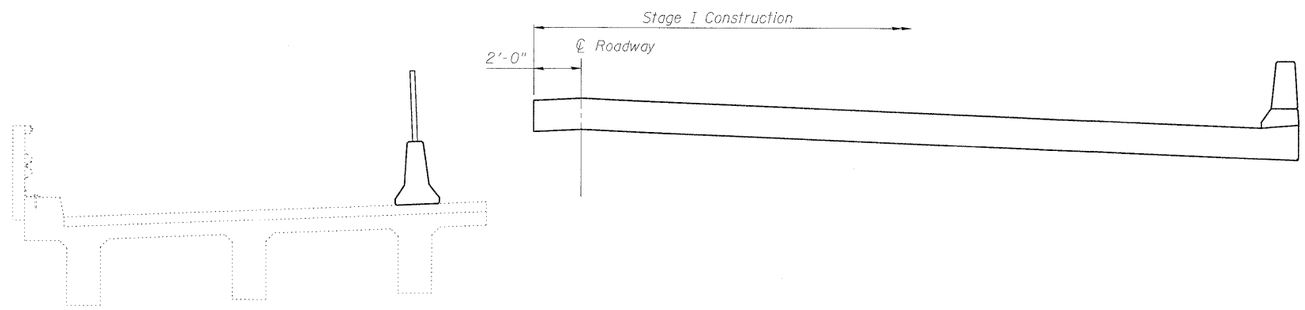

STAGE I CONSTRUCTION

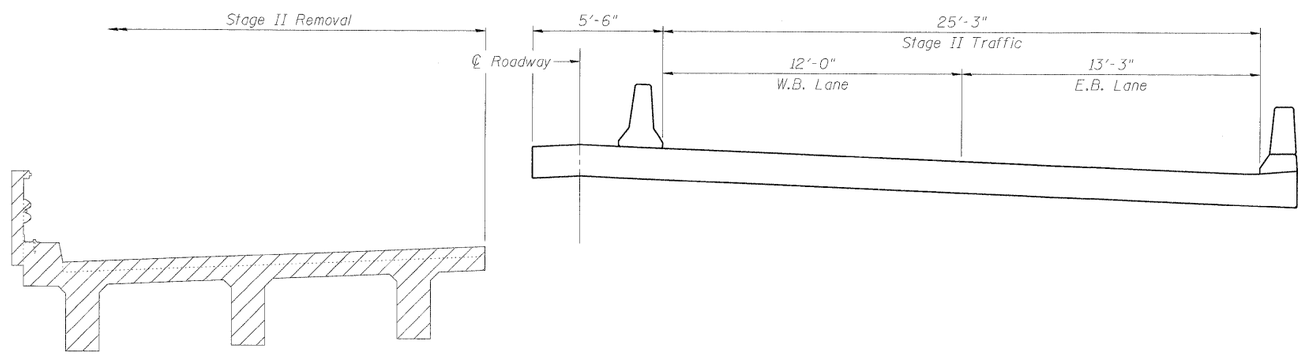

STAGE II REMOVAL

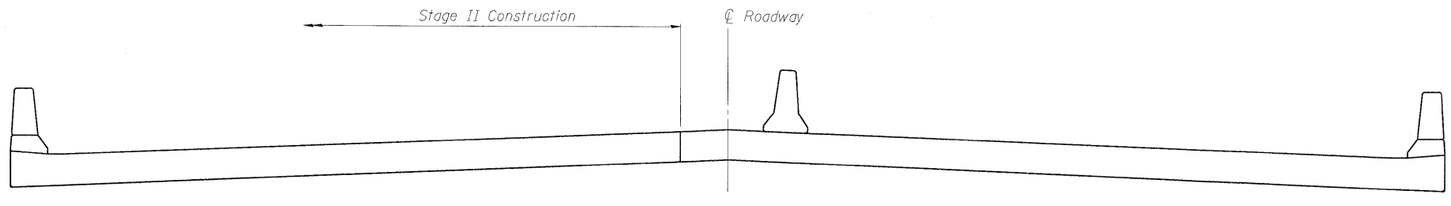

STAGE II CONSTRUCTION

STAGE CONSTRUCTION NOTES

1. Hatched area indicates Removal of Existing Structures.
2. The cross sections are viewed looking east.
3. For quantity of Temporary Concrete Barrier and Temporary Modular Glare Screen, see Roadway plans.

STR-3 OF 26

JACOBS

	DESIGNED - LJH	REVISED -	STATE OF ILLINOIS DEPARTMENT OF TRANSPORTATION
	DRAWN - FJD	REVISED -	
PLOT SCALE =	CHECKED - JSS	REVISED -	
PLOT DATE = 10/9/2008	DATE - 10/15/08	REVISED -	

F.A.P. ROUTE 870 (ILLINOIS 53) OVER EAST BRANCH DUPAGE RIVER

STAGE CONSTRUCTION DETAILS

SCALE: | SHEET NO. OF SHEETS | STA. TO STA.

F.A. RTE.	SECTION	COUNTY	TOTAL SHEETS	SHEET NO.
870	533-X-B-R-1	DuPAGE	87	40

CONTRACT NO. 60B95

FED. ROAD DIST. NO. _ | ILLINOIS | FED. AID PROJECT

FILE NAME = P:_2002\020019.004\Cadd\Structural\SN022-0181 Final\Sheet\0220181-60B95-003-STGCON_1.dgn