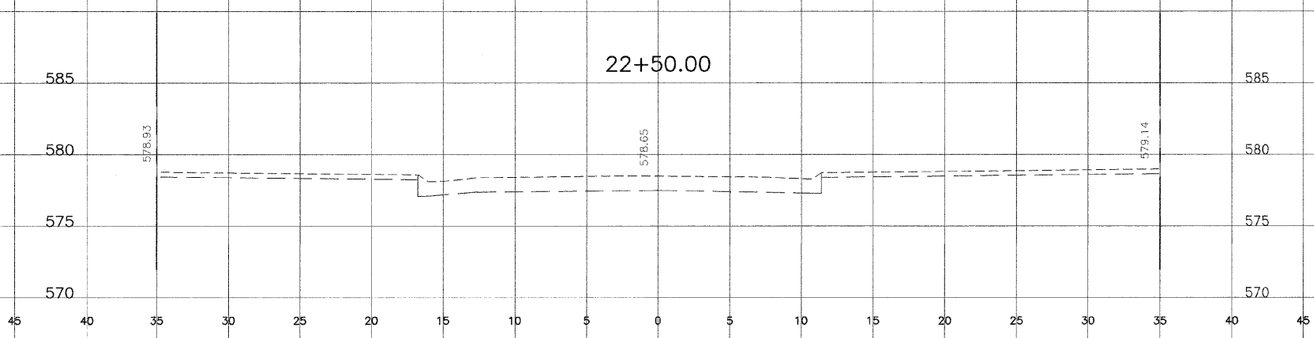

MATCH EXISTING AT STA. 22+40.80

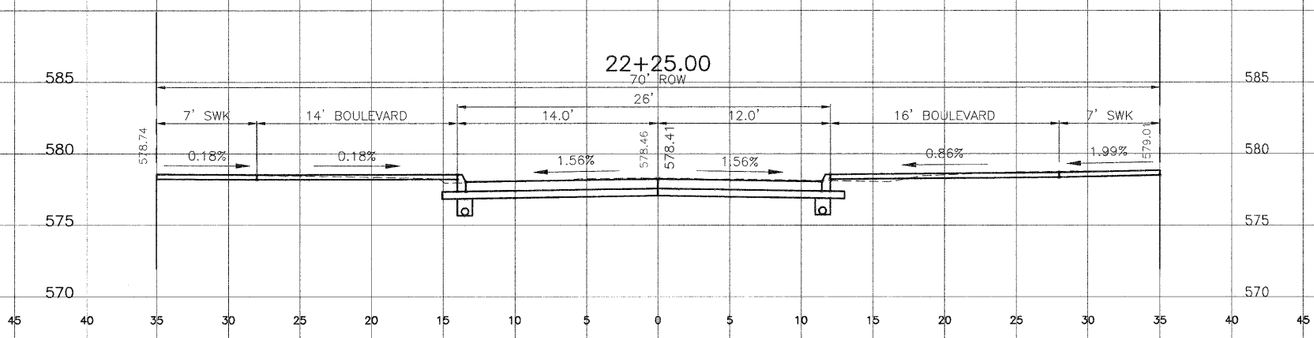

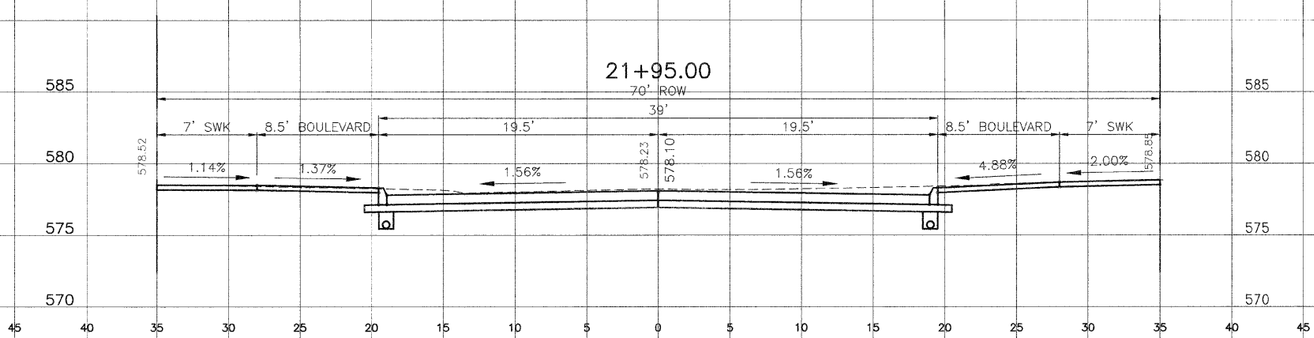

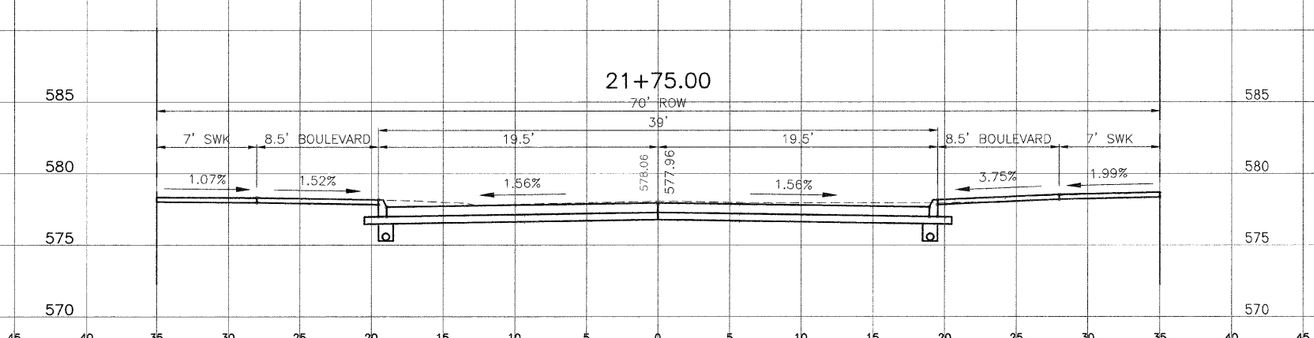

85481