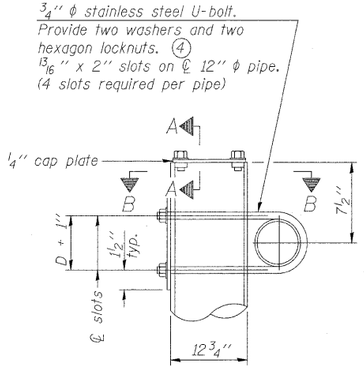

DETAIL A

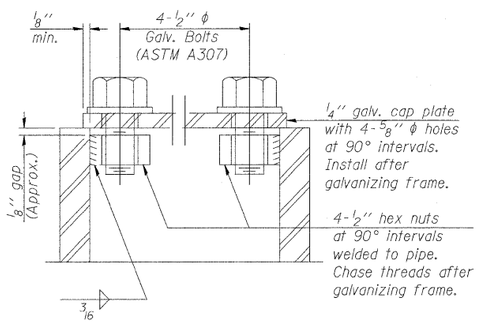

SECTION A-A

As an alternate to bolts, may use galvanized drive-fit caps installed after galvanizing frame.

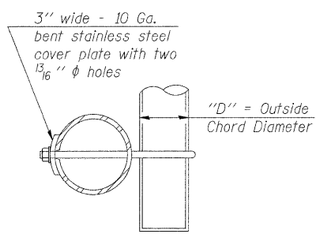

SECTION B-B

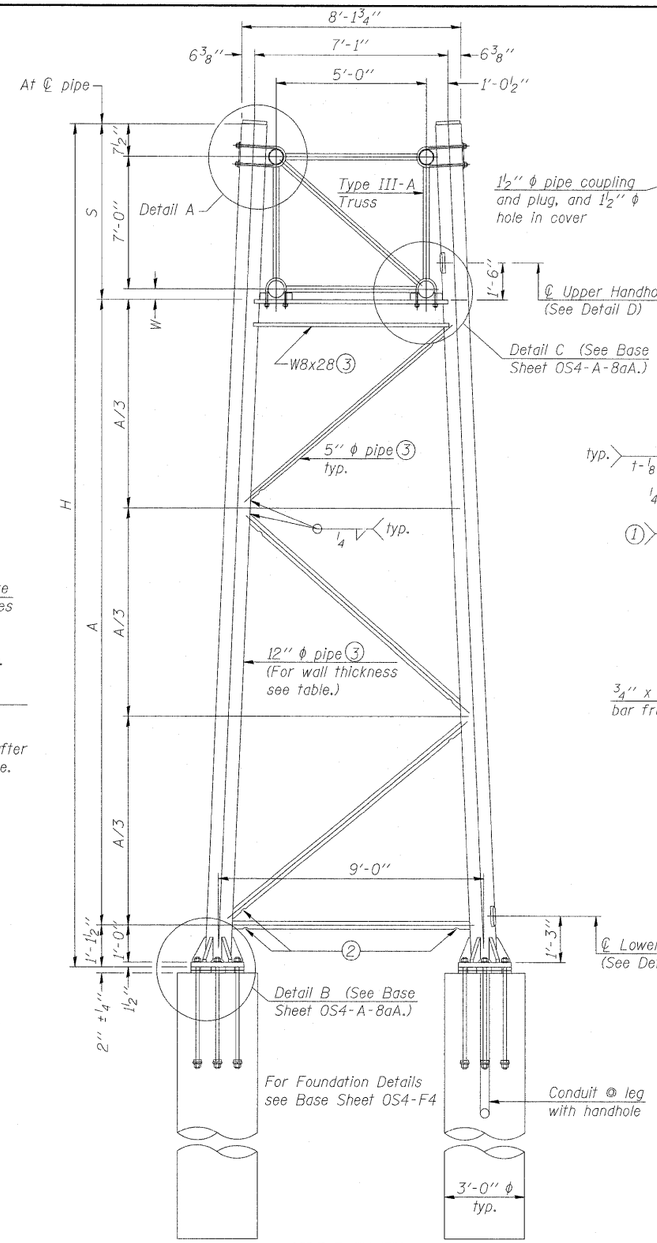

SIDE ELEVATION

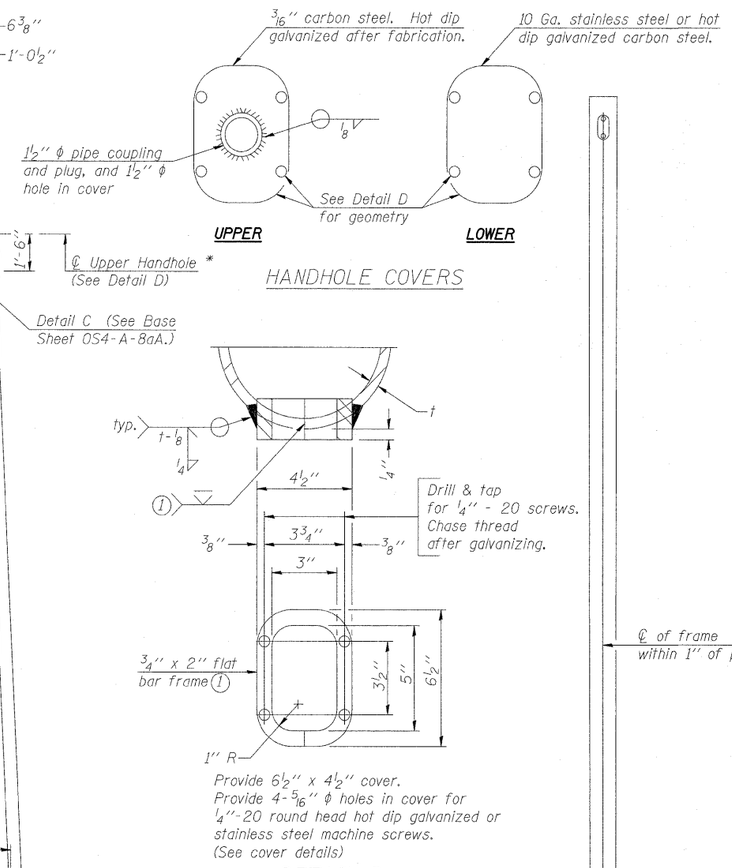

HANDHOLE COVERS

DETAIL D

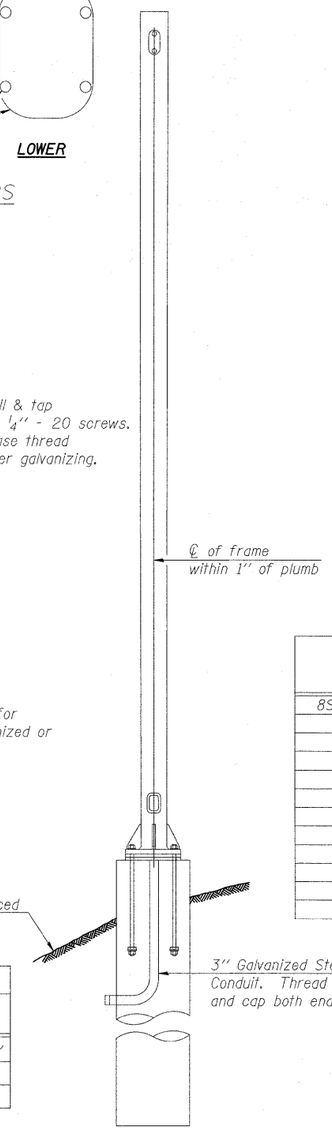

END ELEVATION

Dimensions		
Truss Chord Nominal Dia.	W	S
7"	4 3/4"	8'-0 1/4"
8 1/2"	5 1/2"	8'-1"
9"	5 3/4"	8'-1 1/4"

TRUSS SUPPORT DETAILS

(12" ϕ Pipe-Type III-A Truss

Support Design Loads: See Base Sheet OS-A-1 for design and loading criteria.

Load combinations checked include deadload plus:

a) 100% wind normal to sign, 20% parallel to sign

b) 60% wind normal to sign, 30% parallel to sign

(1) In lieu of fabricated handhole frame as shown, may cut from 2" plate (rolling direction vertical). All cut faces to be ground to ANSI Roughness of 500 min or less.

(2) Galvanizing vent holes of adequate size shall be provided on underside at each end of bracing pipes. Alternately, holes may be provided in wall of pipe column. All vent holes shall be drilled and de-burred, typ.

(3) Steel pipe, plate, carbon steel handhole covers and rolled sections shall be hot dip galvanized after fabrication. Painting is not permitted. See Base Sheet OS-A-1.

(4) See General Notes for fasteners.

(5) Dimensions shown are based on selection criteria in the Sign Structures Manual. Nonstandard applications must have dimensions verified or amended as appropriate.

(6) "H" based on 15'-0" or actual sign height, whichever is greater

* For dynamic message sign installations, provide upper and lower handholes in both legs of each support frame.

Structure Number	Station	Support Left	Support Right	Pipe Wall Thickness	H (6)	A
8S082I064L004.9	161+00	X		0.33"	30.431	22.285
			X	0.33"	29.802	21.656

NUMBER	REVISION	DATE

OVERHEAD SIGN STRUCTURES
SUPPORT FRAME FOR
TYPE III-A ALUMINUM TRUSS

OS4-A-8a 12-1-08

FILE NAME = $FILEL$	USER NAME = $USER$	DESIGNED - ___	REVISED - ___
		DRAWN - ___	REVISED - ___
	PLOT SCALE = $SCALE$	CHECKED - ___	REVISED - ___
	PLOT DATE = $DATE$	DATE - _____	REVISED - ___

STATE OF ILLINOIS
DEPARTMENT OF TRANSPORTATION

OVERHEAD SIGN STRUCTURES SUPPORT FRAME FOR TYPE III-A ALUMINUM TRUSS

SCALE: _____ | SHEET NO. __ OF ___ SHEETS | STA. _____ TO STA. _____

F.A.I RTE.	SECTION	COUNTY	TOTAL SHEETS	SHEET NO.
64	Dist 8 ITS 2010-3	ST CLAIR	14	8

CONTRACT NO. 76C64

FED. ROAD DIST. NO. _ | ILLINOIS | FED. AID PROJECT